Paper I

Qn	Answer
1	4
2	1
3	1
4	5
5	2
6	4
7	4
8	5
9	2
10	2
11	5
12	5
13	3
14	4
15	2
16	1
17	All
18	1
19	3
20	3
21	5
22	5
23	4
24	3
25	3

Qn	Answer
26	3
27	4
28	4
29	3
30	1
31	3
32	4
33	3
34	3
35	1
36	5
37	5
38	S,E: 4 | T:1
39	4
40	4
41	3
42	5
43	All
44	5
45	5
46	4
47	3
48	1
49	1
50	4

Paper II (Part A)

1 (a) (i) **[1]**

```
Social networking has
advantages and disadvantages
```

(ii) Ignore border style. **[2]**

Schedule

Time	Event
8 am	Drama
10 am	News
Lunch	

Marks allocated as follows:

A: **1 mark** for centered caption, two bold headings and three rows with correct data

B: **1 mark** for the merged last row with *Lunch* left aligned

(b) (i) **Two** points from **[2]**

- It is easy to keep one standard throughout the page.
- Less code lines to manage (modification in one place can be applied to the whole web site or multiple web pages) / Easy maintenance
- Reduced code complexity / Easy to understand
- Efficiency as it reduces the code lines / Page will load quicker when the main CSS file has been cached

(ii) Exact syntax and spellings essential. **[2]**
Ignore *spacing* defects and case.

```
p, h1, h2 {color: red; font-family:Calibri;}

p, h2 {text-align:justify;}
```

Marks allocated as follows:

A: **1 mark** for row 1

B: **1 mark** for row 2

(c) **One mark** for **each** correct row. **[3]**
Ignore case of INSERT.
Double or single quotations can be used.

Row 1: 'admin' , 'A!2t*' , 'school_db'

Row 2: INSERT, student, name, class

Row 3: $sql

2 **(a) One mark** per each correct row. **[6]**

No mark for a row if more than **one item** in that row.

Ignore spelling defects **and** case.

Phrase no.	**Item**
(i)	traditional marketplace
(ii)	harmful explosives
(iii)	subscription as a revenue model
(iv)	social commerce
(v)	payment gateway
(vi)	Government to Citizen (G2C) service / G2C service / G2C

(b) **(i)** 8 **[2]**

(ii) Any purpose from **[2]**

- Finding the maximum / largest / highest / greatest in a list of positive numbers
- Find the maximum / largest / highest / greatest from a given input

3 (a) (i) NoOfHours **[1]**

(Correct symbol, exact spelling, case and proper positioning is **essential.** Ignore spacing defects.**)**

(ii) **[4]**

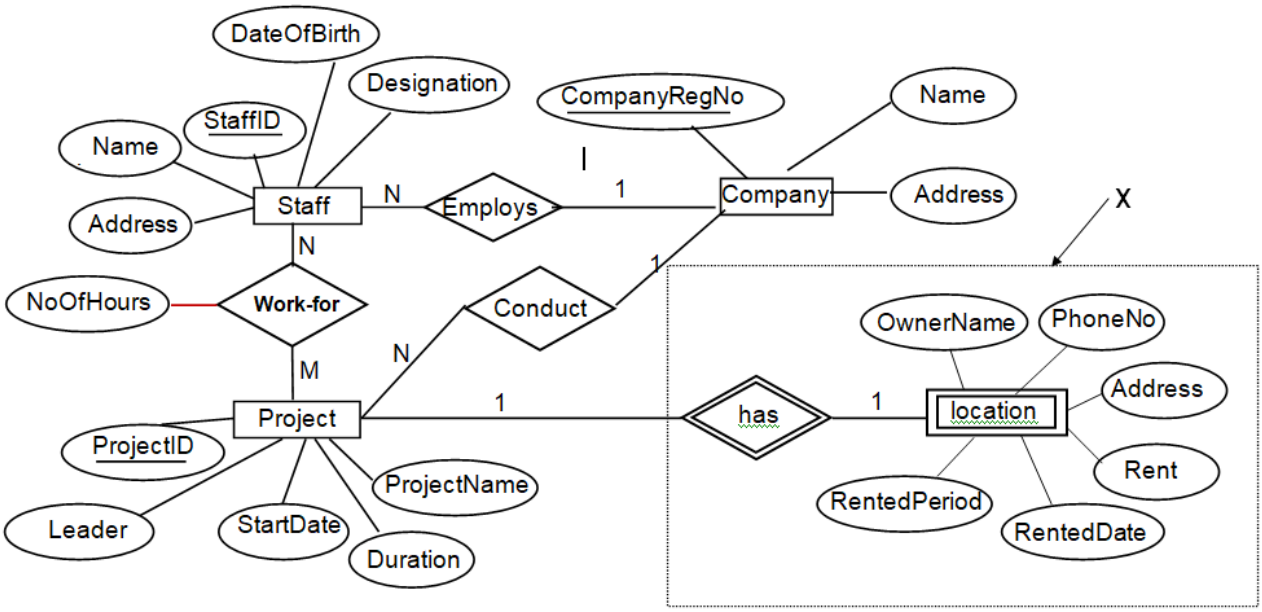

Marks allocated as follows:

A: **1 mark** for `Location` with correct symbol and label
B: **1 mark** for *`has`* relationship with correct symbol and linked to `Project` entity with proper cardinality
C: **1 mark** for **all** six `Location` attributes with correct symbols
D: **1 mark** for completeness (full marks for A,B,C, exact spellings and case with no spaces)

Note: If `Company` entity is linked to `Location` entity, do not deduct marks.

(b) **One mark** per each correct row. **[5]**

No mark if more than **one term** in any row.

Ignore spelling defects.

(i) Domain Name System / DNS
(ii) Application Layer
(iii) DHCP
(iv) CIDR
(v) Parity Bit

4 **(a)** **(i)** Address of the next instruction to be executed **[1]**

(ii) Ready **[1]**

(**No mark** if more than **one state** given.)

(b) **(i)** Space for a file is allocated as a collection of consecutive / adjacent / contiguous / continuous blocks **[1]**

(ii) **Any one** point from **[1]**

- Extending the file size is difficult
- May result in fragmentation / external fragmentation / Defragmentation can take up a lot of time and may need the system to be down
- The expected final file size must be known at the time of creation
- Finding space for a new file is difficult

(iii) **Any one** point from **[2]**

- Final sizes of the files to be stored are known
- On a CDROM, there is no deletion of files thus there is no danger of fragmentation
- There is no need to extend file sizes

(iv) **Any one** point from **[1]**

- Address of the next block of the file / next block number
- End-of-File marker
- Pointer to the next block

(c) **(i)** **Any one** from **[1]**

- 8200_{10}
- 010000000001000_2 / 10000000001000_2

(Students need not write the bases.)

(ii) The program size could be larger than the size of the physical memory **[1]**

(iii) **Any one** point from **[1]**

- That page would not have been accessed before
- That page would have got evicted / removed / expelled from physical memory

Paper II (Part B)

1 (a) **[4]**

A	B	C	Z
0	0	0	0
0	0	1	0
0	1	0	0
0	1	1	1
1	0	0	0
1	0	1	1
1	1	0	1
1	1	1	1

Marks allocated as follows:

Four marks for all **8 rows** correct
Three marks for **maximum 6,7 rows** correct
Two marks for **maximum 4,5 rows** correct
One mark for **maximum 3 rows** correct

(b) **[6]**

		AB			
		00	01	11	10
C	0	0	0	1	0
	1	0	1	1	1

Z = AB + BC + AC

Marks allocated as follows:

A: **1 mark** for correct map entries
B: **3 marks** for the **three** correct loops (1 mark X 3)
C: **2 marks** for the final simplified expression

(c) **[5]**

Z**ero marks** if any other gate is used or if **all the inputs** are not labelled. Deduct **1 mark** it the output is not labelled.

Equation not essential.

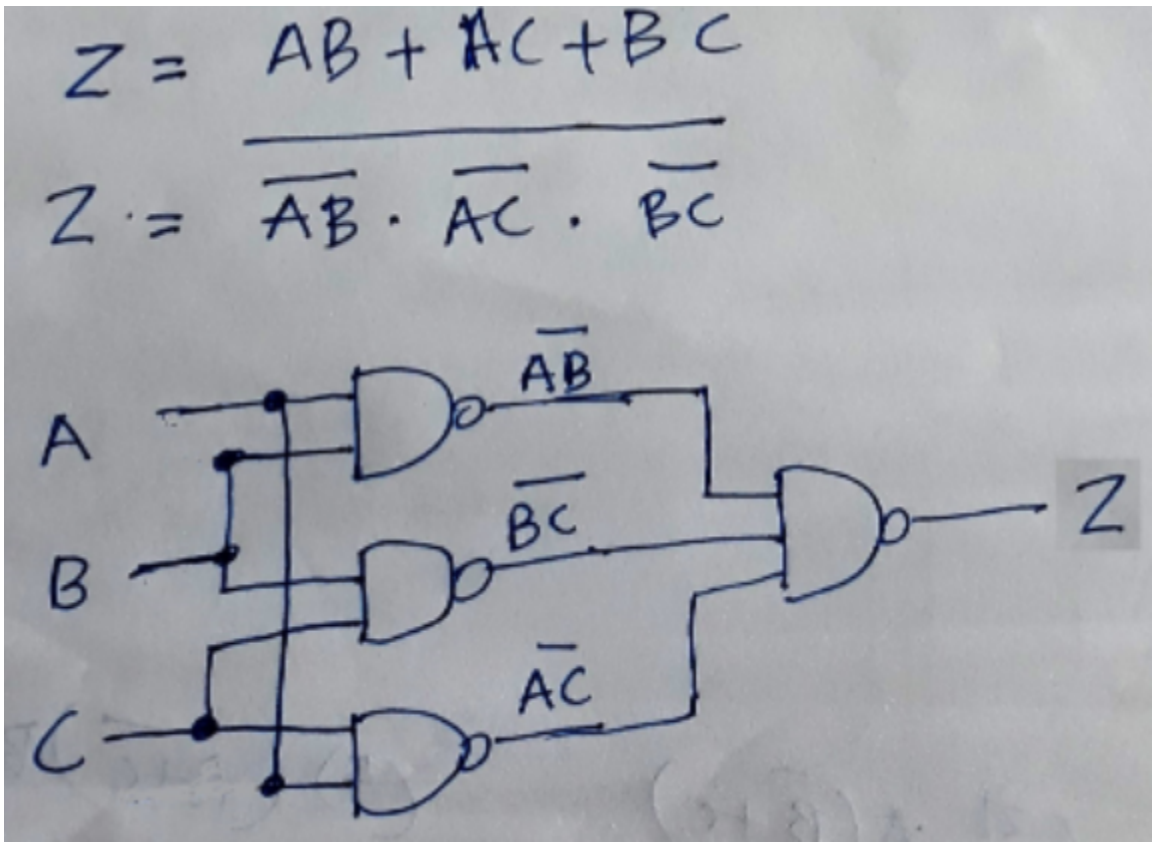

Marks allocated as follows:

5 marks if the diagram is as above (ignore intermediate terms)

Alternative:

For a logically correct but an unoptimized NAND gate arrangement (using many gates) give a total of **2 marks**

2 (a) **2 marks** per correct row **[6]**

Building order may be different.

Building	Network address	Subnet mask	IP Address range
Admin	192.248.16.0	255.255.255.192	192.248.16.1 - 192.248.16.62 or 192.248.16.0 - 192.248.16.63
Lab	192.248.16.64	255.255.255.192	192.248.16.65 - 192.248.16.126 or 192.248.16.64 - 192.248.16.127
Lib	192.248.16.128	255.255.255.192	192.248.16.129 - 192.248.16.190 or 192.248.16.128 - 192.248.16.191

Alternative answer for **any row:**

Network address	Subnet mask	IP Address range
192.248.16.192	255.255.255.192	192.248.16.193 - 192.248.16.254 or 192.248.16.192 - 192.248.16.255

<u>Alternative answer 1:</u>

Building	Network address	Subnet mask	IP Address range
Admin	192.248.16.0	255.255.255.128	192.248.16.1 - 192.248.16.126 or 192.248.16.0 - 192.248.16.127
Lab	192.248.16.128	255.255.255.192	192.248.16.129 - 192.248.16.190 or 192.248.16.128 - 192.248.16.191
Lib	192.248.16.192	255.255.255.192	192.248.16.193 - 192.248.16.254 or 192.248.16.192 - 192.248.16.255

Alternative answer 2:

Building	Network address	Subnet mask	IP Address range
Admin	192.248.16.0	255.255.255.192	192.248.16.1 - 192.248.16.62 or 192.248.16.0 - 192.248.16.63
Lab	192.248.16.64	255.255.255.192	192.248.16.65 - 192.248.16.126 or 192.248.16.64 - 192.248.16.127
Lib	192.248.16.128	255.255.255.128	192.248.16.129 - 192.248.16.254 or 192.248.16.128 - 192.248.16.255

(From the two ranges given for each *IP Address Range*, only the first one gives the range of *usable* IP addresses.)

Note:

If only **two columns** correct in a row, give **one mark** for that row.
(E.g., if only 2 columns are correct in each of the three rows, then give a total of **three marks [**1 mark X 3] for this part.)

(b) **Any one** point from **[1]**

- Costly / difficult to install / impractical due to buildings being geographically separated
- Difficult to configure
- There is no such connectivity requirement for the school

(c) [7]

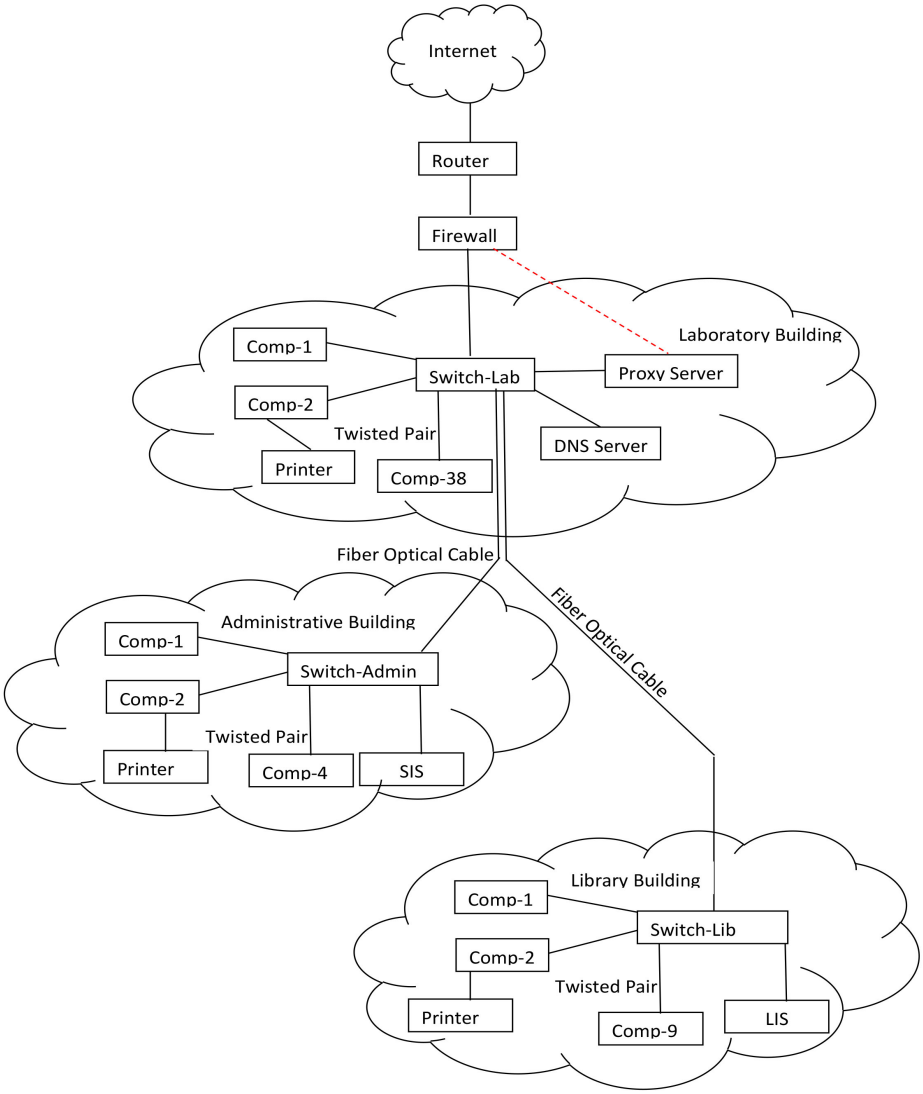

Marks allocated as follows:

A: **1 mark** for *Internet – Router – Firewall* link
B: **1 mark** for getting the Internet connection to the *Lab* switch
C: **1 mark** for interconnecting the *Admin* and *Lib* switches to the *Lab* switch
D: **1 mark** for properly locating *Proxy* and the *DNS servers*
E: **1 mark** for properly connecting SIS to *Admin* switch **and** LIS to *Lib* switch
F: **1 mark** for properly identifying the number of nodes in each building
G: **1 mark** for properly connecting the printer† **and** for not using unnecessary devices

† As the printer type is not indicated, connecting each printer directly to the relevant switch is also acceptable

(d) **Any one** point from **[1]**

- The applications that the school will be using will benefit from the many desirable features of TCP such as <u>reliability</u>, <u>in-order delivery</u>, <u>connection oriented nature</u>, <u>flow-control</u>, <u>congestion control</u>, <u>error recovery</u> and <u>re-transmission of packets</u> when necessary
- The transmission time required for the school applications is not very critical
- TCP is used for the *web* and *email* applications

3 (a) (i) Online sales **[1]**

(ii) Any one from **[1]**

- Customers being reluctant to buy second hand books online as they do not have the ability to inspect their quality
- Having to compete against online sellers of new books / e-books

(iii) **1 mark** for each **[3]**

A: B2C – Between ABC Books and its customers / Between a business and its customers
B: B2B – Between ABC Books and other businesses / Between two other businesses
C: C2C – Between individual customers of the marketplace

(iv) **Any one** from **[1]**

- Advertising support / revenue
- Subscription fees
- Transaction fees / commissions

(v) **Any one** from **[1]**

- through credit/debit cards / payment gateways / electronic payment cards
- through e-banking / Internet banking
- transactions using mobile phones
- through third party payment facility providers

(vi) **Any one** from **[1]**

- Analyzing high demand books
- Analyzing the purchase trends
- Analyzing customer preferences

(b) **(i)** Agent 2 **[1]**

(ignore spelling defects and case)

(ii) **[2]**

Sense – A
Compute – C
Control - B

Marks allocated as follows:

Two marks for all **three** correct
One mark for **one or two** correct

(iii) **1 mark** for each **[2]**

C – Database read and write operations
R – Camera input feed and Camera control commands

(iv) P: informing Agent 2 to operate **[1]**

(v) **[1]**

CCTV raw data input need to be processed before storage in the DB. Processing allows data reduction, annotations and other value added functions.

4 (a) **[8]**

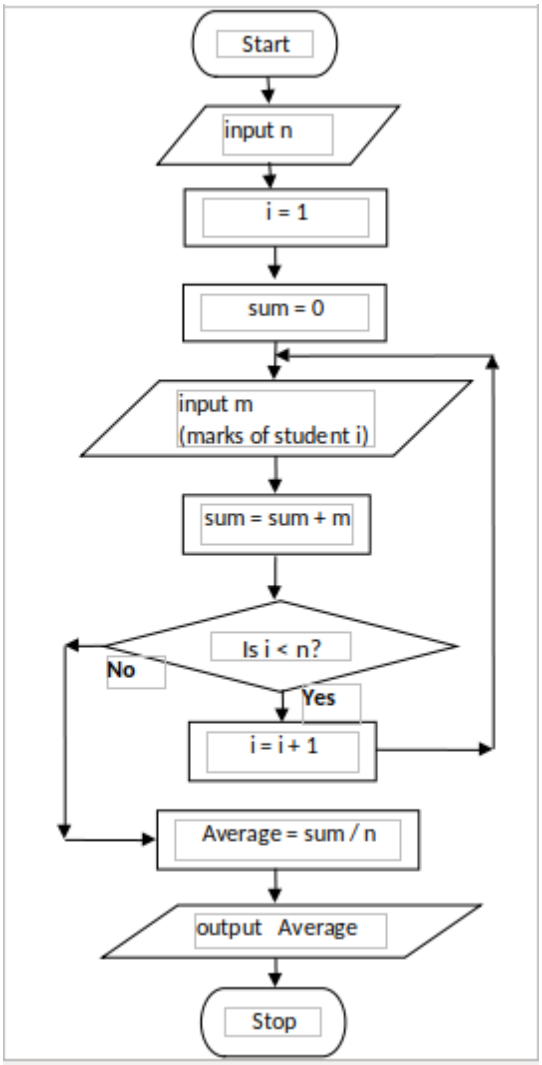

Marks allocated as follows:

A - **1 mark** for the *input of n*
B - **1 mark** for <u>both</u> *initializations*
C - **1 mark** for the *loop check*
D - **1 mark** for the *input of a mark* (if properly inside loop)
E - **1 mark** for the *summation computation* <u>and</u> *computing next loop index* (if properly inside loop)
F - **1 mark** for the <u>*correct*</u> *average computation*
G - **1 mark** for *printing the* <u>*correct*</u> *average*
H - **1 mark** for correct *symbols* <u>and</u> *arrows*

(b) **(i)** 3 **[1]**

(ii) **Any one** from **[1]**

- Count the number of even numbers in a list
- Print the number of even numbers in a list

(iii) **[5]**

```
n= int(input())
a = 0
while (n > 0):
    x = int(input())
    if (x % 2 == 0):
        a = a + 1
    n = n -1
print (a)
```

An alternative code:

```
n = int(input())
a = 0
while True:
    if n <= 0:
        break
    x = int(input())
    if x%2 == 0:
        a = a + 1
    n = n - 1
print (a)
```

Note: Any other correct Python program that correctly implements the algorithm is also acceptable (E.g., Through the use of a `for` loop)

Marks allocated as follows:

A: **1 mark** for correctly placed `n= int(input())`

B: **1 mark** for correctly placed `while (n > 0):`

`n = n - 1`

C: **1 mark** for the following if correctly placed inside loop

`x= int(input())`

D: **1 mark** for the correctly placed `a = 0`

and for the following if correctly placed inside loop

```
if (x % 2 == 0):
    a = a + 1
```

and for the correctly placed

`print (a)`

E: **1 mark** for correct *indentation*

5 (a) **[2]**

Relation I:

Normal form	Justification
2	As all non-key attributes are fully functionally dependent on the primary key / There are transitive dependencies

Relation II and Relation III: **Any one** or **both** from

-

Normal form	Justification
2	As all non-key attributes are fully functionally dependent on the primary key / There are transitive dependencies

-

Normal form	Justification
3	No transitive dependencies

Marks allocated as follows:

Two marks for all **three** relations correct
One mark for **one or two** relations correct

(b) **[5]**

Relation I: P: 3 / 3 NF
S: Customer (Customer_NIC, Customer_Name, City)
Customer_City (City, Postal_Code)

Relation II: **Any one** from

- Q: 3 / 3 NF
  T: Vehicle_Owner (Owner_Id, Owner_Name, Contact_No)

- Q: It cannot be normalized further from 3 NF
  T: - / Vehicle_Owner (Owner_Id, Owner_Name, Contact_No)

Relation III: **Any one** from

- R: 3 / 3 NF
  U: Vehicle(Vehicle_Reg_No, Description, Owner_Id)

- R: It cannot be normalized further from 3 NF
  U: - / Vehicle(Vehicle_Reg_No, Description, Owner_Id)

Marks allocated as follows:

P - **1 mark**
S – **2 marks** (one mark per relation with primary keys marked)
Q and T - **1 mark**
R and U - **1 mark**

(c) **[5]**

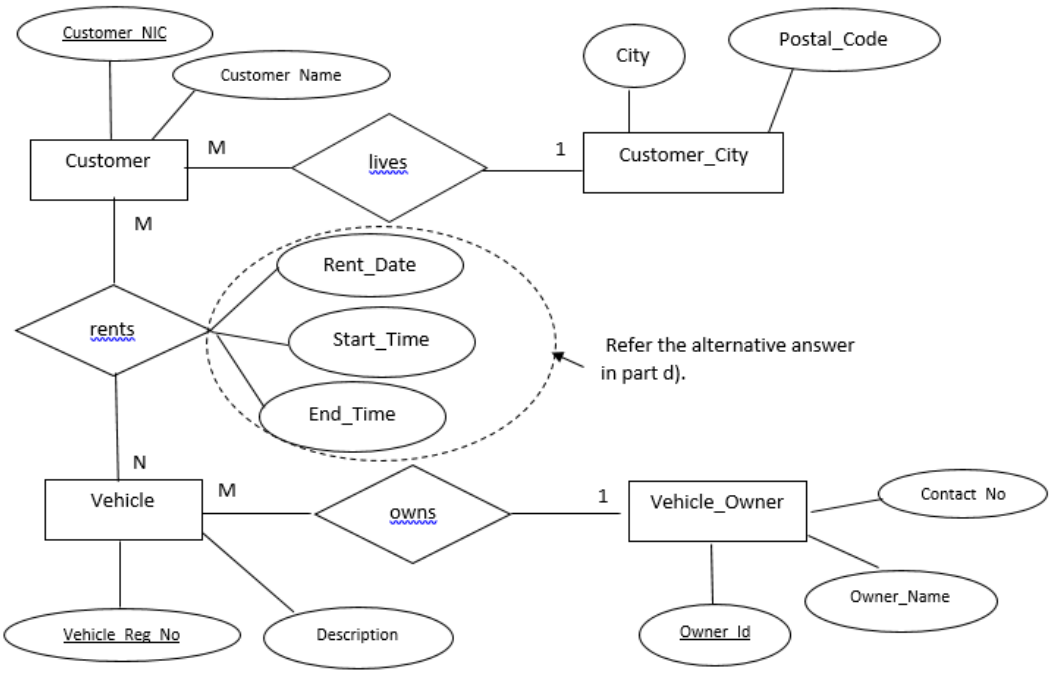

Marks allocated as follows:

A: **1 mark** per relationship (*rents, owns)* with correct cardinality (Total **2 marks**)

B: **1 mark** for `Customer`, `Vehicle` and `Vehicle_Owner` entities with all attributes

C: **1 mark** for correctly denoting all three keys

D: **1 mark** for completeness (spellings, case, spacing)

(d) **[1]**

Rent(<u>Customer_NIC</u>, <u>Vehicle_Reg_No</u>, Rent_Date, Start_Time, End_Time)

Alternative answers:

1. This relationship may also be incorporated to the ER diagram in (c) **with** the keys correctly marked.

2. CREATE TABLE Rent
(Customer_NIC varchar(10),
Vehicle_Reg_No varchar (8), Rent_Date date, Start_Time time, End_Time time,
PRIMARY KEY (Customer_NIC, Vehicle_Reg_No);
Note: The primary key can also be introduced as a constraint.

(e) **Any one** answer from **[2]**

- SELECT Owner_Id, Vehicle_Reg_No FROM Vehicle GROUP BY Owner_Id;
- SELECT Owner_Id, Vehicle_Reg_No FROM Vehicle;

Marks allocated as follows:

A: **1 mark** for correct query (ignore case of SELECT)

B: **1 mark** for completeness (correct syntax, correct names, semicolon use)

6 (a) (i) One mark per each. **[5]**

P - Test request slip / Request slip
Q - Invoice
R - Receipt
S - Updated receipt
T - Report

(ii) One mark per each. **[2]**

(A) W - Payments

(B) X - Approved invoice + payment

(b) (i) Any one point from **[1]**

- Analysing / finding the requirements of an information system before its development
- Finding the functional and non-functional requirements of a system
- Analysing the requirements of a proposed system
- Studying and analyzing the user needs to define the problem domain and system requirements
- Determining user expectations for a new or modified product

(ii) Any two advantages from **[2]**

- Allows to discover the system scope/boundary and the nature of system interaction within its environment
- Allows to detect and resolve conflicts between the requirements
- Allows to prioritize requirements relatively to each other
- Helps in deciding the critical success factors
- Reduces project / implementation risks
- Helps in distinguishing *functional* and *non-functional* requirements

(iii) Any one point from **[1]**

- Through <u>testing</u> based on functional requirements (**Except** system/integration testing)
- Through validation / verification

(iv) One mark per each correct requirement (Max. **two marks** per set). **[4]**

Functional requirements: A, B
Non-functional requirements: **Any two** from D, F, G

(**Deduct 1 mark** for any incorrect **extra** label. Note: Minimum 0 marks)