සියලු ම හිමිකම් ඇවිරිණි/முழுப் பதிப்புரிமையுடையது/All Rights Reserved]

නව නිර්දේශය/புதிய பாடத்திட்டம்/New Syllabus

NEW
ශ්‍රී ලංකා විභාග දෙපාර්තමේන්තුව ශ්‍රී ලංකා විභාග දෙපාර්තමේන්තුව
இலங்கைப் பரீட்சைத் திணைக்களம்
Department of Examinations, Sri Lanka

අධ්‍යයන පොදු සහතික පත්‍ර (උසස් පෙළ) විභාගය, 2019 අගෝස්තු
கல்விப் பொதுத் தராதரப் பத்திர (உயர் தர)ப் பரீட்சை, 2019 ஒகஸ்ற்
General Certificate of Education (Adv. Level) Examination, August 2019

09.08.2019 / 0830 – 1030

භෞතික විද්‍යාව I
பௌதிகவியல் I
Physics I

01 E I

පැය දෙකයි
இரண்டு மணித்தியாலம்
Two hours

Instructions:

- *This question paper consists of* **50** *questions in* **12** *pages.*
- *Answer* ***all*** *the questions.*
- *Write your* ***Index Number*** *in the space provided in the answer sheet.*
- *Read the instructions given on the back of the answer sheet carefully.*
- *In each of the questions* **1** *to* **50**, *pick one of the alternatives from* (1), (2), (3), (4), (5) *which is* ***correct*** *or* ***most appropriate*** *and* ***mark your response on the answer sheet with a cross*** (×) ***in accordance with the instructions given on the back of the answer sheet.***

Use of calculators is not allowed.

(Consider that the acceleration due to gravity, $g = 10\,m\,s^{-2}$)

1. Which of the following is **not** a fundamental unit?
(1) m (2) J (3) cd (4) K (5) mol

2. The dimensions of the gravitational constant G are given by
(1) $L^2M^{-1}T^{-1}$ (2) L^2M^{-2} (3) $L^2M^{-2}T^{-1}$ (4) $L^3M^{-1}T^{-2}$ (5) $L^3M^{-2}T^{-2}$

3. When a bipolar junction transistor operates in saturation mode, a further increase in base current will
(1) turn on the transistor.
(2) turn off the transistor.
(3) increase the collector current.
(4) decrease the collector current.
(5) not change the collector current.

4. According to the evidences found in Particle Physics, matter is composed of
(1) 6 quarks.
(2) 6 leptons.
(3) 4 quarks and 4 leptons.
(4) 6 quarks and 6 leptons.
(5) 6 quarks and 6 leptons.

5. The variation of the gravitational potential $V(r)$ due to a point mass, with distance r is best represented by

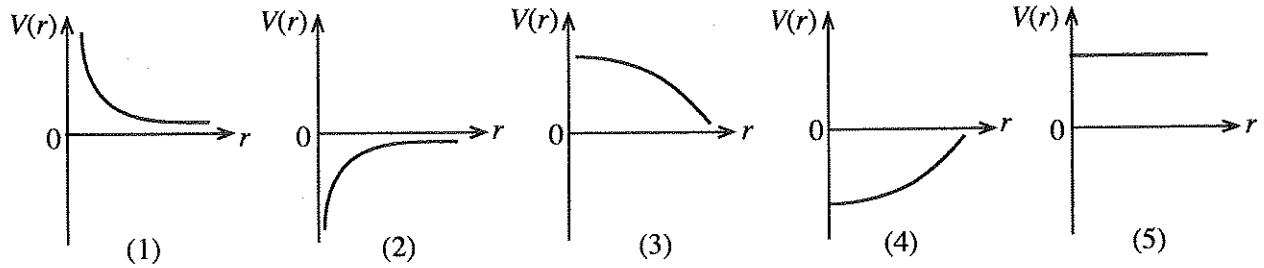

6. Which of the following statements is **incorrect** regarding thermometry?
(1) There must be a measurable physical quantity that varies with temperature.
(2) Mercury-glass thermometers consist of thin-walled glass bulbs.
(3) By using a mercury-glass thermometer with a large mercury bulb, the range of measurements can be increased.
(4) Two different types of thermometers may give slightly different readings at the same temperature as all thermometric properties are not equally sensitive.
(5) Having a large contact angle between mercury and glass is an advantage for accurate readings in mercury-glass thermometer.

[*See page two*

7. Consider the following statements regarding the physical properties of ultraviolet and ultrasound waves.
   (A) Energy of both waves depends on their frequencies.
   (B) Both waves have the ability of ionizing materials.
   (C) Both waves can be polarized.
   Which of the above statements is/are **incorrect**?
   (1) Only A (2) Only A and B (3) Only A and C
   (4) Only B and C (5) All A, B, and C

8. An object is moving in a circular path at a constant speed v as shown in the figure. The change in velocity of the object, when moving from A to B is

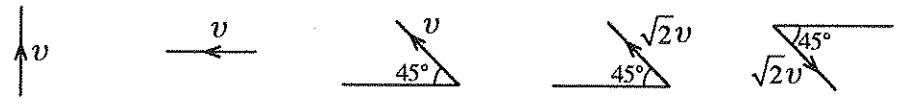

(1) (2) (3) (4) (5)

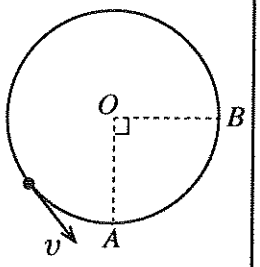

9. A weightlifter lifts a weight vertically up (positive direction) with his hands. The signs of the work done by
   (a) his hands on the weight,
   (b) gravity on the weight, and
   (c) the weight on his hands, respectively, are

	(a)	(b)	(c)
(1)	+	+	+
(2)	+	–	+
(3)	+	–	–
(4)	–	+	–
(5)	–	–	+

10. Consider the following statements regarding a three-level LASER system having energies E_1, E_2, and E_3 ($E_1 < E_2 < E_3$) as shown in the figure.

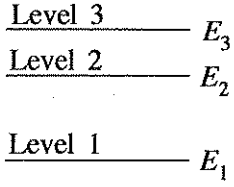

   (A) The LASER action occurs between energy levels 2 and 1.
   (B) The frequency of pumping radiation is $\frac{E_3 - E_2}{h}$.
   (C) Level 3 is known as the metastable energy level.
   Which of the above statements is/are correct?
   (1) Only A (2) Only B (3) Only C
   (4) Only A and C (5) Only B and C

11. Consider the following statements made regarding the velocity of sound in earth atmosphere.
   (A) It does not change with altitude at constant temperature.
   (B) It always increases with decreasing pressure.
   (C) It decreases with increasing altitude as a result of decreasing temperature.
   Which of the above statements is/are correct?
   (1) Only A (2) Only B (3) Only C
   (4) Only A and C (5) All A, B, and C

12. Which of the following statements regarding the X-ray production in common applications is **incorrect**?
   (1) Two circuits are used in the X-ray production system.
   (2) Anode could be damaged due to the bombardment of electrons.
   (3) Low voltage is sufficient to heat the cathode.
   (4) Energy of the X-rays emitted depends on the current through the filament.
   (5) X-ray tube must be evacuated to avoid the energy loss of electrons.

[*See page three*

19. When a current of 6A is flowing through the primary coil of an ideal transformer having power of 60 W, output voltage is 12 V. Select the correct answer which gives the type of the transformer and the current ratio (Primary current : Secondary current).

(1) Step down and 6 : 5 (2) Step down and 5 : 6 (3) Step up and 1 : 2
(4) Step up and 5 : 6 (5) Step up and 6 : 5

20. A coil is made by winding N number of turns around a plastic ring of mean radius R and cross sectional area A as shown in the figure. This coil is placed coaxially with a long straight wire carrying a current i. If the rate of change of current through the straight wire is $i_0 \cos \omega t$, which of the following expressions gives the electromotive force (emf) induced in the coil?

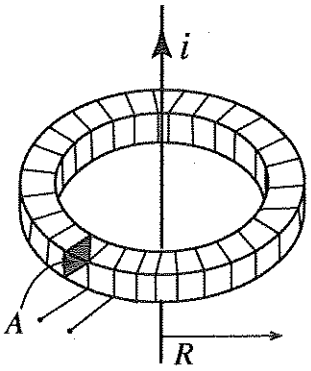

(1) $\mu_0 A N i_0 \cos \omega t$ (2) $\mu_0 A N^2 i_0 \sin \omega t$

(3) $\frac{\mu_0 A N}{\omega} i_0 \sin \omega t$ (4) $\frac{\mu_0 A N}{2\pi R} i_0 \cos \omega t$

(5) $\frac{\mu_0 A N}{4\pi^2 R^2} i_0 \cos \omega t$

21. Consider the points A, B, and C on two equipotential surfaces as shown in the figure. When a proton moves from A to B, the electric field does a work of $3{\cdot}2 \times 10^{-19}$ J on it. Charge of an electron is $-1{\cdot}6 \times 10^{-19}$ C. The electric potential differences V_{AB}, V_{BC}, and V_{CA}, respectively, are

(1) 2 V, –2 V, and 0 V
(2) 2 V, –2 V, and 2 V
(3) –2 V, 2 V, and 0 V
(4) 0·5 V, –0·5 V, and 0 V
(5) –0·5 V, 0·5 V, and 0 V

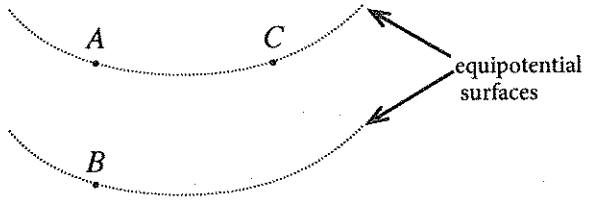

22. A celestial object is located at the mid point of the line joining the centres of the earth and the moon at a certain time. The mass of the moon is 0·0123 times the mass of the earth. Assume that the distance between the centres of the moon and the earth is 60 times the radius of the earth. The acceleration of the object due to the gravity of both the earth and the moon in terms of g is approximately,

(1) $1{\cdot}1 \times 10^{-6} g$ (2) $1{\cdot}1 \times 10^{-3} g$ (3) $3{\cdot}3 \times 10^{-2} g$ (4) $0{\cdot}5\, g$ (5) $1{\cdot}0\, g$

23. The gap of 2 cm between two horizontal plates of surface area 500 cm^2 is filled with an oil having the coefficient of viscosity $0{\cdot}2\ N\,s\,m^{-2}$. A horizontal force of 5 N is applied to the upper plate while keeping the lower plate at rest. What is the velocity of the middle layer of the oil, if the velocities of the oil layers vary linearly across the gap between the plates?

(1) $2{\cdot}5\ m\,s^{-1}$ (2) $5\ m\,s^{-1}$ (3) $10\ m\,s^{-1}$ (4) $25\ m\,s^{-1}$ (5) $50\ m\,s^{-1}$

24. A diode and a resistor are connected in such a way that only two terminals are available for external connections. When a voltage of 1 V is applied across the external terminals, the current through the circuit is 50 mA. When the applied voltage is reversed, the current doubles. What are the forward bias resistance of the diode, and the value of the resistor?

	Resistance (Ω)	
	Diode	Resistor
(1)	0	20
(2)	10	10
(3)	10	20
(4)	20	10
(5)	20	20

[See page five

13. Consider the following statements regarding the dew point of air having water vapour in a closed container.

(A) At dew point, unsaturated water vapour becomes saturated water vapour.
(B) If the temperature is reduced below the dew point, some of the vapour will condense.
(C) At dew point, if the volume of the container is reduced, the absolute humidity of the air will decrease.

Which of the above statements is/are correct?

(1) Only A (2) Only B (3) Only A and B
(4) Only A and C (5) All A, B, and C

14. When the tension of a wire is slowly increased from T_1 to T_2 within the proportional limit, its length changes from l_1 to l_2. The energy stored in the wire during this process is

(1) $(T_2 + T_1)(l_2 - l_1)$ (2) $\frac{1}{2}(T_2 - T_1)(l_2 + l_1)$

(3) $\frac{1}{2}(T_2 - T_1)(l_2 - l_1)$ (4) $\frac{1}{2}(T_2 + T_1)(l_2 + l_1)$

(5) $\frac{1}{2}(T_2 + T_1)(l_2 - l_1)$

15. Hydrogen gas in a container is maintained at standard temperature (300 K) and pressure (1×10^5 N m^{-2}). If the root mean square speed of hydrogen molecules is 2 km s^{-1}, what is the density of hydrogen in the container?

(1) 0·038 kg m^{-3} (2) 0·075 kg m^{-3} (3) 0·150 kg m^{-3} (4) 1·225 kg m^{-3} (5) 2·450 kg m^{-3}

16. A composite rod is formed by connecting two rods *A* and *B* as shown in the figure. Longitudinal wave velocities in rods *A* and *B* are 3210 m s^{-1} and 6420 m s^{-1}, respectively. A longitudinal pulse applied at the free end of the rod *A* propagates with a wavelength of 2 m. What is the wavelength of this wave when it propagates through rod *B*?



(1) 1 m (2) 2 m (3) 3 m (4) 4 m (5) 5 m

17. The magnitude and the direction of the electric field at point *A* due to the point charge distribution shown in the figure are

(1) $\frac{2q}{4\pi\varepsilon_0 a^2} \rightarrow$ (2) $\frac{q}{4\pi\varepsilon_0 a^2} \uparrow$

(3) $\frac{2q}{4\pi\varepsilon_0 a^2} \leftarrow$ (4) $\frac{6q}{4\pi\varepsilon_0 a^2} \uparrow$

(5) $\frac{6q}{4\pi\varepsilon_0 a^2} \downarrow$

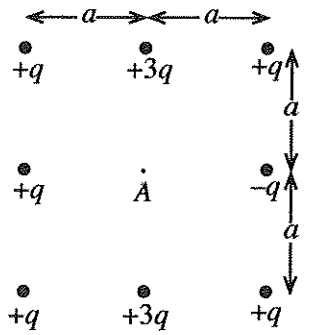

18. Three capacitors with equal capacitance and two batteries with equal electromotive force (emf) are given to construct a circuit to store energy. Which of the following circuits stores the maximum energy?

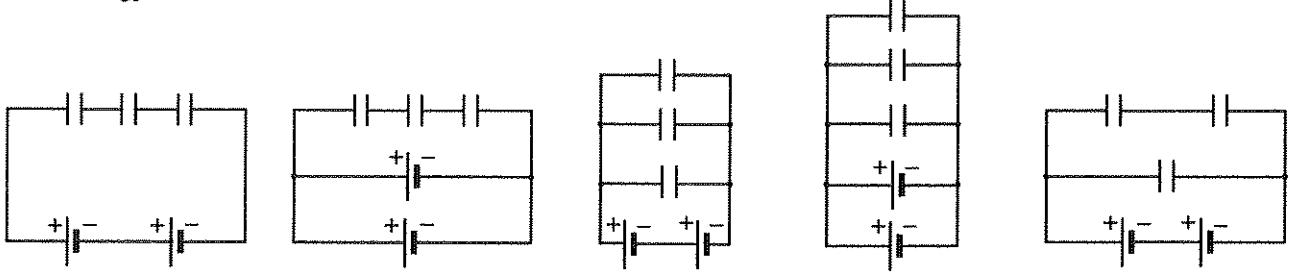

(1) (2) (3) (4) (5)

[See page four

25. An air mass in a cyclone moves around its eye in a spiral path as shown in the figure. The velocity of the air mass at a radial distance of 80 km from the centre of the eye is 150 km h^{-1}. What could be the velocity of the same air mass at a radial distance of 40 km from the centre of the eye?

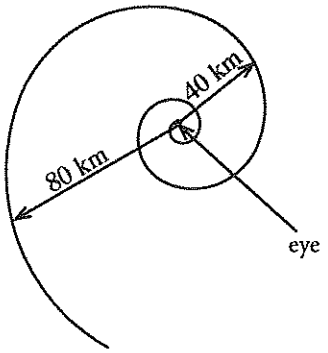

(1) 75 km h^{-1}
(2) 150 km h^{-1}
(3) $150\sqrt{2}$ km h^{-1}
(4) 300 km h^{-1}
(5) 450 km h^{-1}

26. An analogue multimeter connected to a circuit is shown in the figure. The reading of the multimeter is

(1) 8 Ω
(2) 7 mA
(3) 1·4 V
(4) 7 V
(5) 14 V

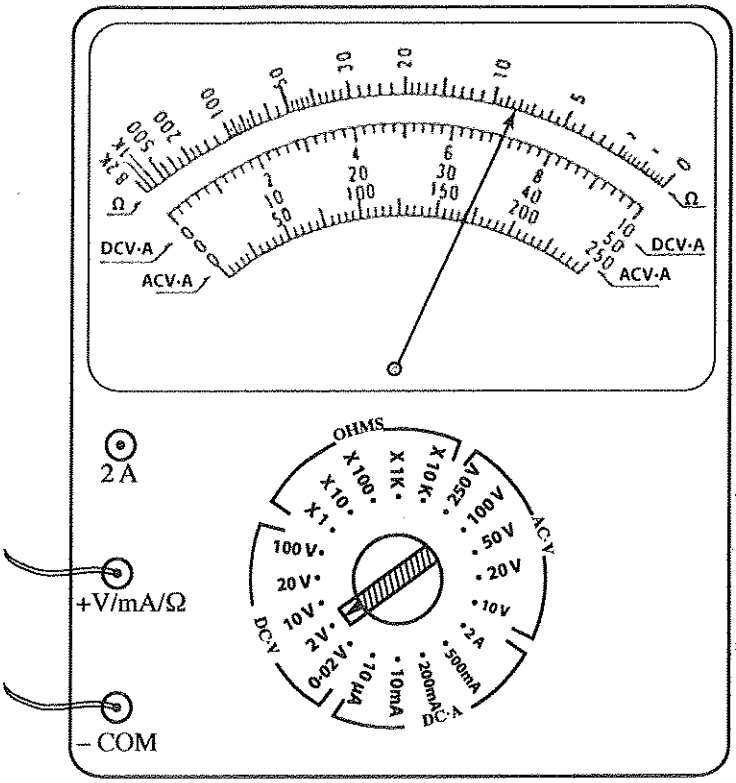

27. A large number of point charges are uniformly spread out over a non-conducting ring of radius r. If the total charge on the ring is Q, what is the electrostatic potential at point P on the axis of the ring, as shown in the figure?

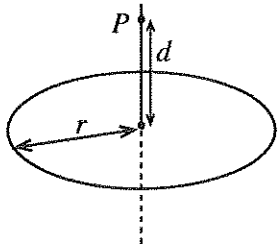

(1) $\frac{Q}{4\pi\varepsilon_0 d}$
(2) $\frac{Q}{4\pi\varepsilon_0 r}$
(3) $\frac{Q}{8\pi^2\varepsilon_0 rd}$
(4) $\frac{Q}{4\pi\varepsilon_0\sqrt{r^2+d^2}}$
(5) $\frac{rQ}{4\pi\varepsilon_0 d\sqrt{r^2+d^2}}$

28. The human blood circulatory system consists of about one billion (10^9) capillary vessels each with an average diameter of 8 μm. If the blood is pumped from the heart at a rate of 5 litres per minute, what is the average speed of blood flowing through the capillary vessels in cm per minute?

(1) $\frac{1}{32\pi}$
(2) $\frac{25}{16\pi}$
(3) $\frac{25}{4\pi}$
(4) $\frac{125}{16\pi}$
(5) $\frac{125}{4\pi}$

[See page six

29. Two thin spherical metallic shells are placed concentrically as shown in the figure. Inner shell is kept at a potential V while the outer shell is grounded. The variation of the electric field E with distance x from the centre is best represented by

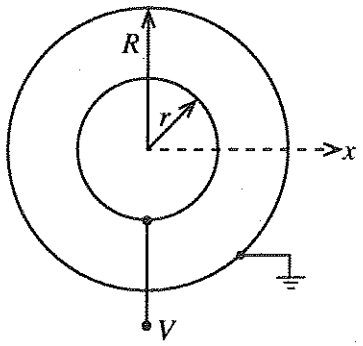

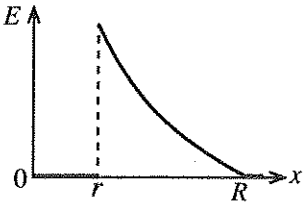

(1)

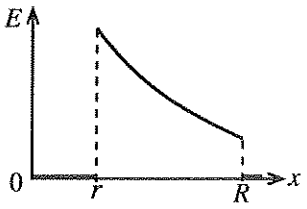

(2)

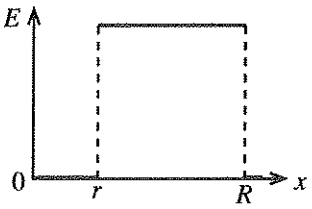

(3)

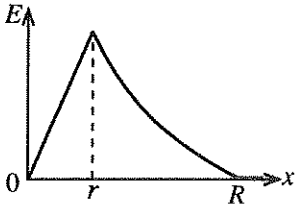

(4)

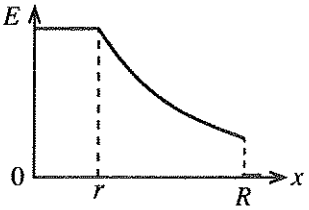

(5)

30. An ideal gas expands from state A to state C along two different paths, ABC and ADC, as shown in the P-V diagram. The heat absorbed by the gas during the processes AB and BC are 200 J and 700 J, respectively. What is the change in internal energy, when the gas expands along the path ADC?

(1) 380 J (2) 520 J
(3) 720 J (4) 880 J
(5) 1080 J

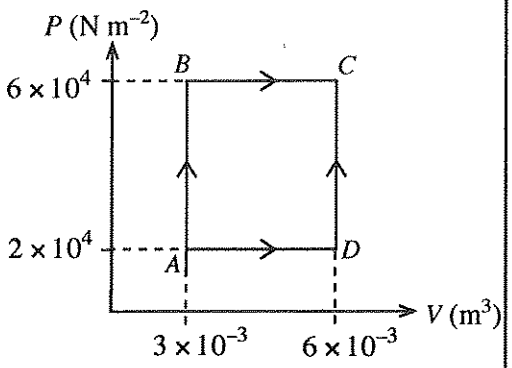

31. A ball is dropped freely to a floor from a height of 1 m. If its speed is reduced by 25% at each bounce, what would be the height the ball reaches after three bounces?

(1) $\frac{3}{4}$ m (2) $\left(\frac{3}{4}\right)^2$ m (3) $\left(\frac{3}{4}\right)^3$ m (4) $\left(\frac{3}{4}\right)^6$ m (5) $\left(\frac{3}{4}\right)^9$ m

32. Part of an orbiting satellite is coated with a metal that has a work function of 5 eV. The Planck constant is $4{\cdot}1 \times 10^{-15}$ eV s and the speed of light is 3×10^8 m s^{-1}. What could be the longest wavelength of incident sunlight that can eject an electron from the metal coating?

(1) 12·3 nm (2) 246 nm (3) 683 nm (4) 800 nm (5) 1230 nm

33. A standard photographic slide has a picture size of 30 mm × 40 mm. An enlarged image of the slide is projected onto a screen 4·0 m away from the projection lens of a 'single-lens slide projector'. If the size of the image on the screen is 1·2 m × 1·6 m, what should be the focal length of the projection lens?

(1) 4·9 cm (2) 9·8 cm (3) 10·2 cm (4) 49 cm (5) 98 cm

[See page seven

34. A test tube is made to float upright in a fluid by placing a metal ball at the bottom of the tube as shown in the figure. Total mass of the tube and the ball is m, density of the fluid is ρ, and the cross-sectional area of the tube is A. Effect of surface tension and the viscosity of the fluid can be neglected. If the tube is given a small vertical displacement, what is the period of oscillations of the subsequent motion of the tube?

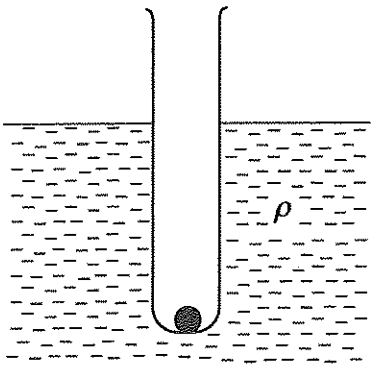

(1) $2\pi\sqrt{\frac{A\rho g}{m}}$ (2) $2\pi\sqrt{\frac{m}{A\rho g}}$ (3) $2\pi\sqrt{\frac{2m}{A\rho g}}$

(4) $2\pi\sqrt{\frac{m}{2A\rho g}}$ (5) $2\pi\sqrt{\frac{mg}{A^2\rho}}$

35. Consider a massless balloon attached to one end of a light string. The other end of the string is attached to the bottom of a water tank which is fixed in a truck as shown in the figure. The balloon is completely submerged in water. The velocity-time graph shows the motion of the truck.

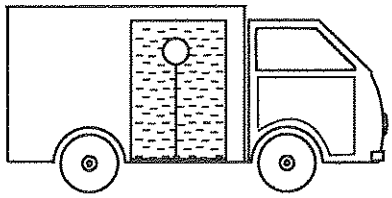

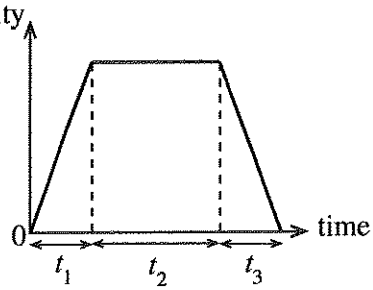

The positions of the balloon and the string inside the water tank during the time intervals t_1, t_2, and t_3 are best represented by

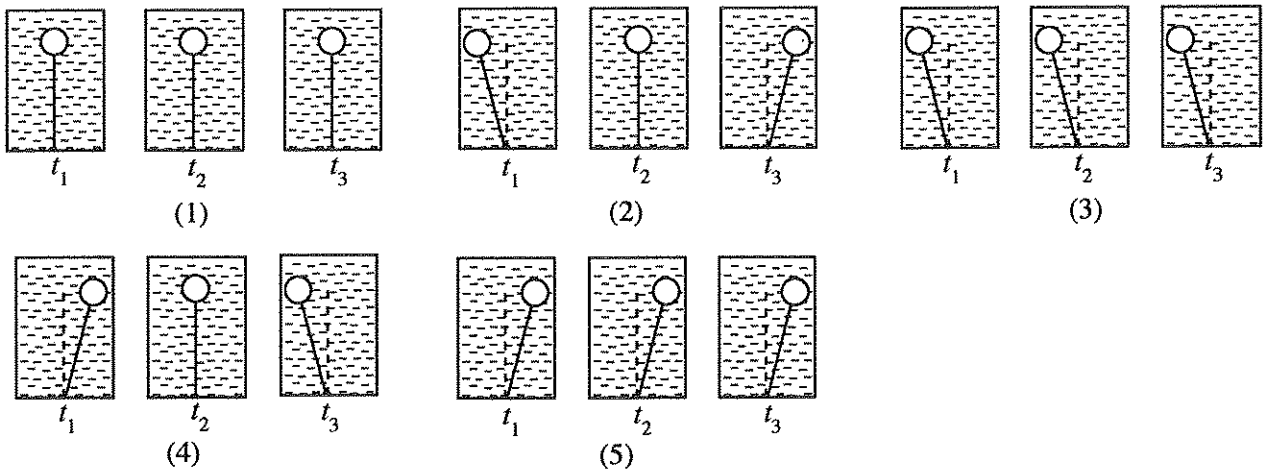

36. Consider four metal balls of same volume placed on a smooth horizontal surface. Mass of each of the first three balls is m while the mass of the fourth ball is $2m$. They are equally separated on a straight line. The first ball moves with speed v and collides with the second ball resulting a series of linear elastic collisions among the balls. After all the collisions, the motion of each ball is best represented by

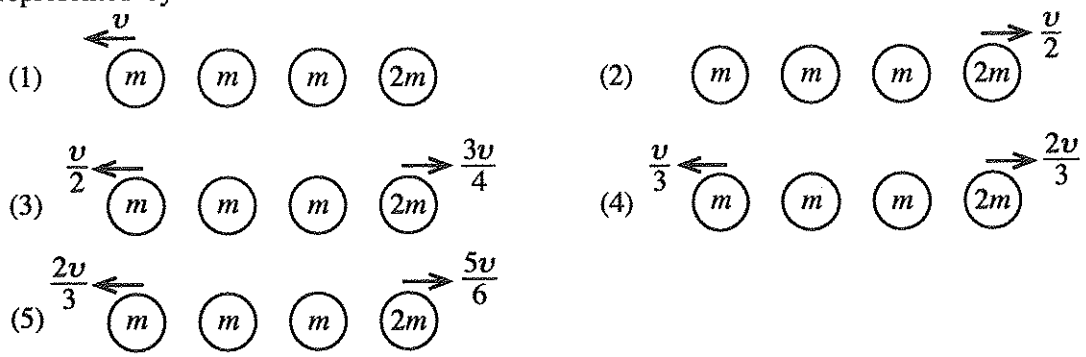

[See page eight

37. For optimum operation of a light emitting diode (LED), forward voltage and current should be 2 V and 10 mA, respectively. Transistor is having V_{BE} = 0·7 V, current gain β = 100, and $V_{CE(sat)}$ = 0·1 V. For the circuit shown in the figure, what are the values of R_B and R_C for the optimum operation of the LED?

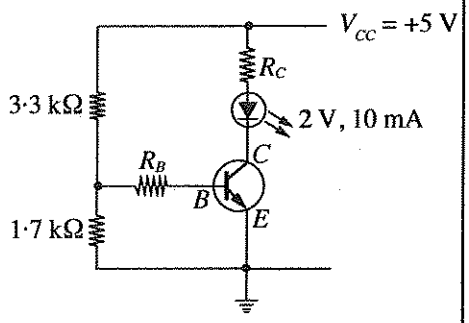

(1) R_B = 100 Ω and R_C = 1 kΩ
(2) R_B = 1 kΩ and R_C = 1 kΩ
(3) R_B = 1 kΩ and R_C = 290 Ω
(4) R_B = 10 kΩ and R_C = 1 kΩ
(5) R_B = 10 kΩ and R_C = 290 Ω

38. A piece of metal is attached to the top of a rectangular wooden block that floats in water. As shown in the figure, 50% of the volume of the wooden block is submerged in water. **The metal piece and the wooden block have the same mass.** If the wooden block with the metal piece is flipped up side down, what could be the percentage of the volume of the wooden block submerged in water?

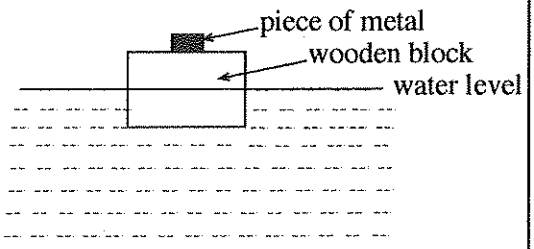

(1) Slightly smaller than 50% (2) Much smaller than 50% (3) 50%
(4) Slightly larger than 50% (5) Much larger than 50%

39. As shown in the figure, an incompressible liquid flows steadily through a horizontal pipe. Two narrow vertical tubes are fixed at two places on the horizontal pipe where the cross-sectional areas are A and $2A$. If the height difference of the liquid columns in the two vertical tubes is h, flow rate of the liquid through the pipe is

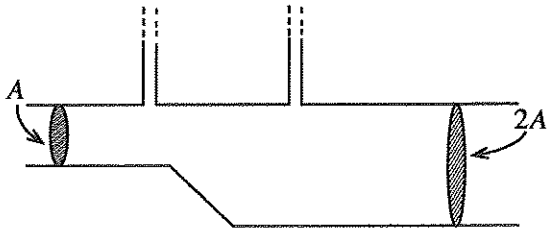

(1) $A\sqrt{2gh}$ (2) $A\sqrt{6gh}$
(3) $A\sqrt{\frac{3gh}{2}}$ (4) $2A\sqrt{\frac{gh}{3}}$
(5) $2A\sqrt{\frac{2gh}{3}}$

40. The figure shows the displacement-time graphs for the motion of two cars with respect to a lamp post aside the road. Consider the displacement to the right side of the lamp post as positive. A student has made the following statements regarding the motion of cars relevant to the points P, Q, and R marked on the graph.

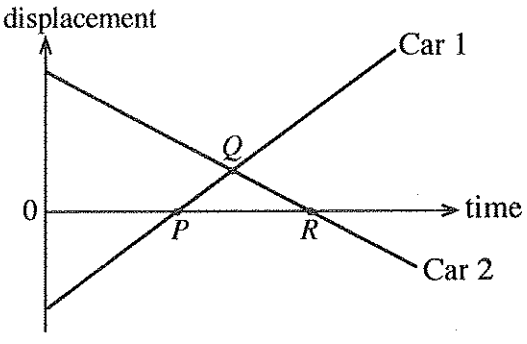

(A) Relevant to P: Car 1 coming from left crosses Car 2.
(B) Relevant to Q: Both cars are moving towards the lamp post and cross each other.
(C) Relevant to R: Car 2 coming from right passes the lamp post.

Which of the above statements is/are correct?

(1) Only B (2) Only C (3) Only A and B
(4) Only B and C (5) All A, B, and C

[See page nine

41. A whistling firecracker having a constant whistling frequency is fired vertically upward. It travels initially with an acceleration, then with a deceleration, and finally **blasts before coming to the rest.** An observer at ground directly below the firecracker listens to the whistling sound of the firecracker. Consider the following statements regarding the frequency of the sound heard by the observer.

(A) During the acceleration, it is higher than the whistling frequency and is decreasing with time.

(B) During the deceleration, it is lower than the whistling frequency and is increasing with time.

(C) Just before the blast, it becomes equal to the whistling frequency.

Which of the above statements is/are correct?

(1) Only A (2) Only B (3) Only C
(4) Only A and B (5) Only B and C

42. A metal bowl of mass 700 g contains 1 litre of water at 27 °C. When a steel ball of mass 300 g at 120 °C is dropped into the water in the bowl, the final temperature of water is measured to be 30 °C. Specific heat capacities of steel and water are 500 J kg^{-1} K^{-1} and 4200 J kg^{-1} K^{-1}, respectively. Out of the metals given in the table, what could be the metal that the bowl is made of?

Metal	Specific Heat Capacity (J kg^{-1} K^{-1})
Aluminium	900
Iron	450
Copper	385
Silver	230
Lead	128

(1) Aluminium (2) Copper
(3) Lead (4) Iron
(5) Silver

43. Three right angled prisms of refractive indices n_1, n_2, and n_3 ($n_2 > n_1, n_3$) are arranged very close to each other on a table as shown in the figure. There are no gaps between the contact surfaces of the prisms. A ray entering through the face AB with an incident angle i, refracts at faces AB, BC, CD, and DE, and emerges from the face DE without deviation. The angles of refraction at the faces AB, BC, and CD are r_1, r_2, and r_3, respectively. Which of the following expressions is **incorrect**?

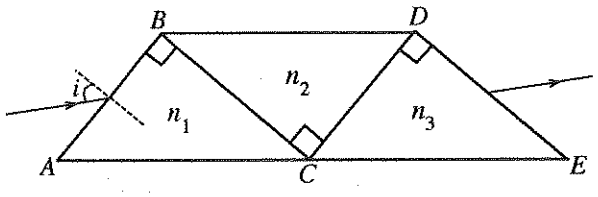

(1) $\sin i = n_1 \sin r_1$ (2) $n_2 \sin r_2 = n_1 \cos r_1$ (3) $\sin i = n_3 \cos r_3$
(4) $n_2 \cos r_2 = n_3 \sin r_3$ (5) $\cos i = n_3 \cos r_3$

44. Each of the single turn wire loops placed on xy plane as shown in figures, carries the same current I. A uniform magnetic field is applied along the positive direction of the x-axis. Assume that each wire loop can rotate freely about its symmetric axis perpendicular to the magnetic field. Which choice represents the order of loops that the initial torque acting on them are in descending order?

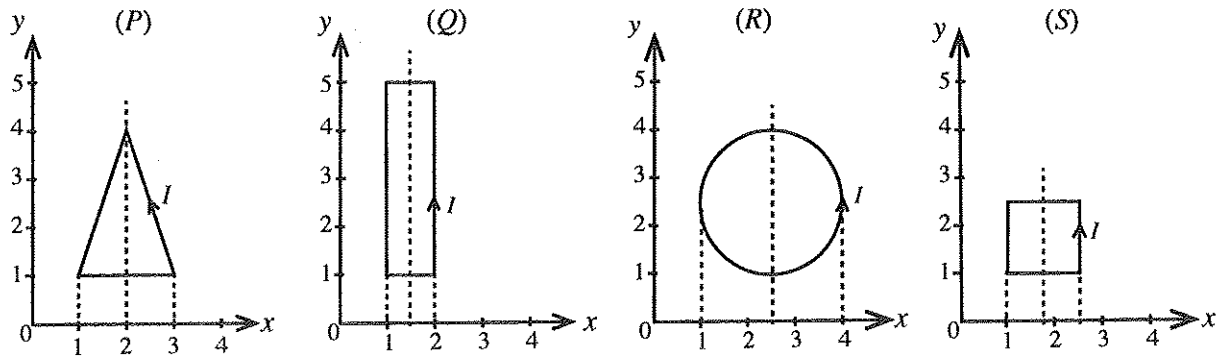

(1) P, Q, R, S (2) R, Q, P, S (3) Q, P, R, S (4) S, R, Q, P (5) R, Q, S, P

[See page ten

45. Three cells with electromotive force (emf) E_1, E_2, and E_3, and internal resistances r_1, r_2, and r_3, respectively, are connected as shown in the figure. Which of the following expressions gives the potential at point P of the circuit?

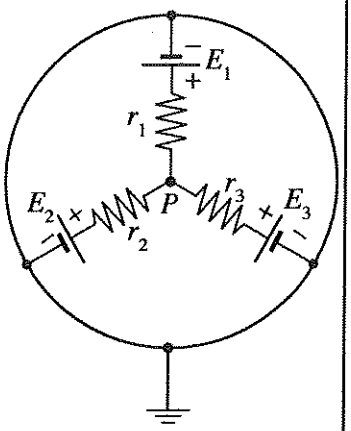

(1) $\dfrac{E_1 + E_2 + E_3}{3}$

(2) $\dfrac{E_1E_2E_3}{E_1E_2 + E_2E_3 + E_3E_1}$

(3) $\dfrac{E_1r_1^2 + E_2r_2^2 + E_3r_3^2}{r_1r_2 + r_2r_3 + r_1r_3}$

(4) $\dfrac{E_1r_2r_3 + E_2r_1r_3 + E_3r_1r_2}{r_1r_2 + r_2r_3 + r_1r_3}$

(5) $\dfrac{E_1r_2r_3 + E_2r_1r_3 + E_3r_1r_2}{r_1r_2r_3}$

46. Consider a battery of electromotive force (emf) E_0 and internal resistance r. As shown in the figure, it is connected in series with a resistor R and a variable dc voltage source which can be reversible. When the voltage of the variable source V_{VR} is varied, the graph of I *vs* V is best represented by

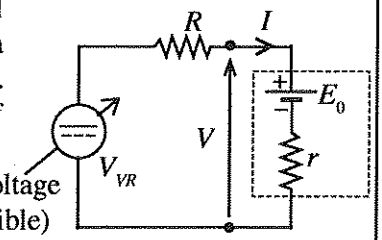

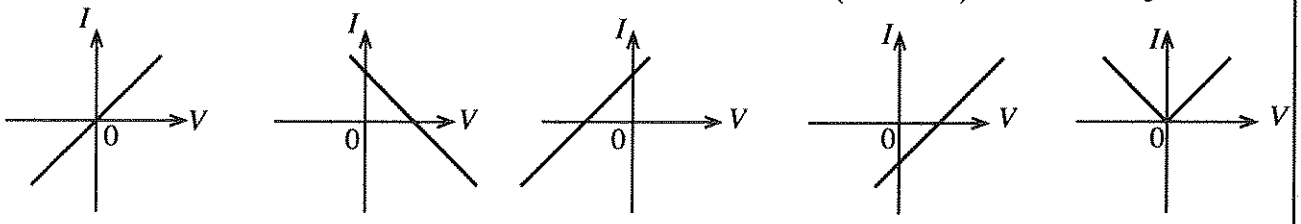

(1) (2) (3) (4) (5)

47. Consider the circuit shown in the figure. The graphs show the waveforms of the applied voltage and the current through the load L.

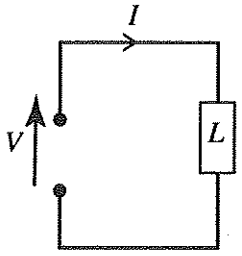

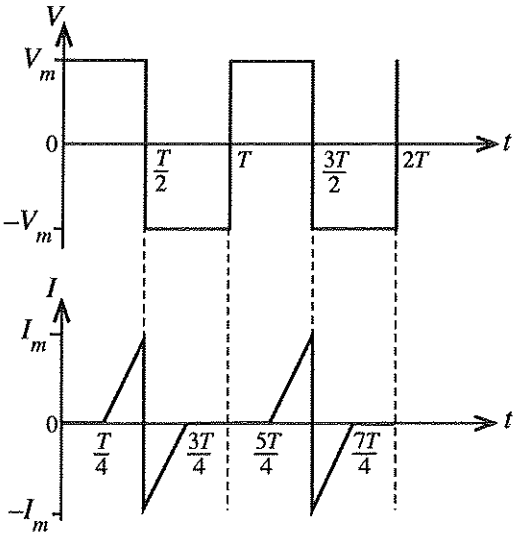

The average power dissipation of the load is

(1) 0 (2) $\dfrac{V_mI_m}{4}$ (3) $\dfrac{V_m}{\sqrt{2}}\dfrac{I_m}{\sqrt{2}}$ (4) V_mI_m (5) $2V_mI_m$

[See page eleven

48. Two long, straight, and parallel wires are placed in free space. Consider the following two cases as shown in the figures.

(a) Wires carry the same current I in the same direction.

(b) Wires carry the same current I in opposite directions.

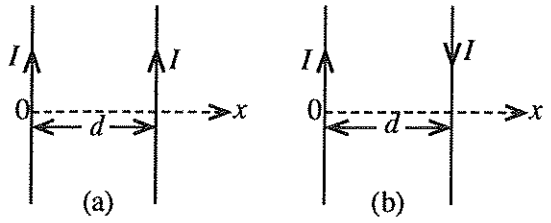

Consider the direction of the magnetic flux density into the paper as positive. Which pair of graphs best represents, the variation of the magnetic flux density B between the two wires?

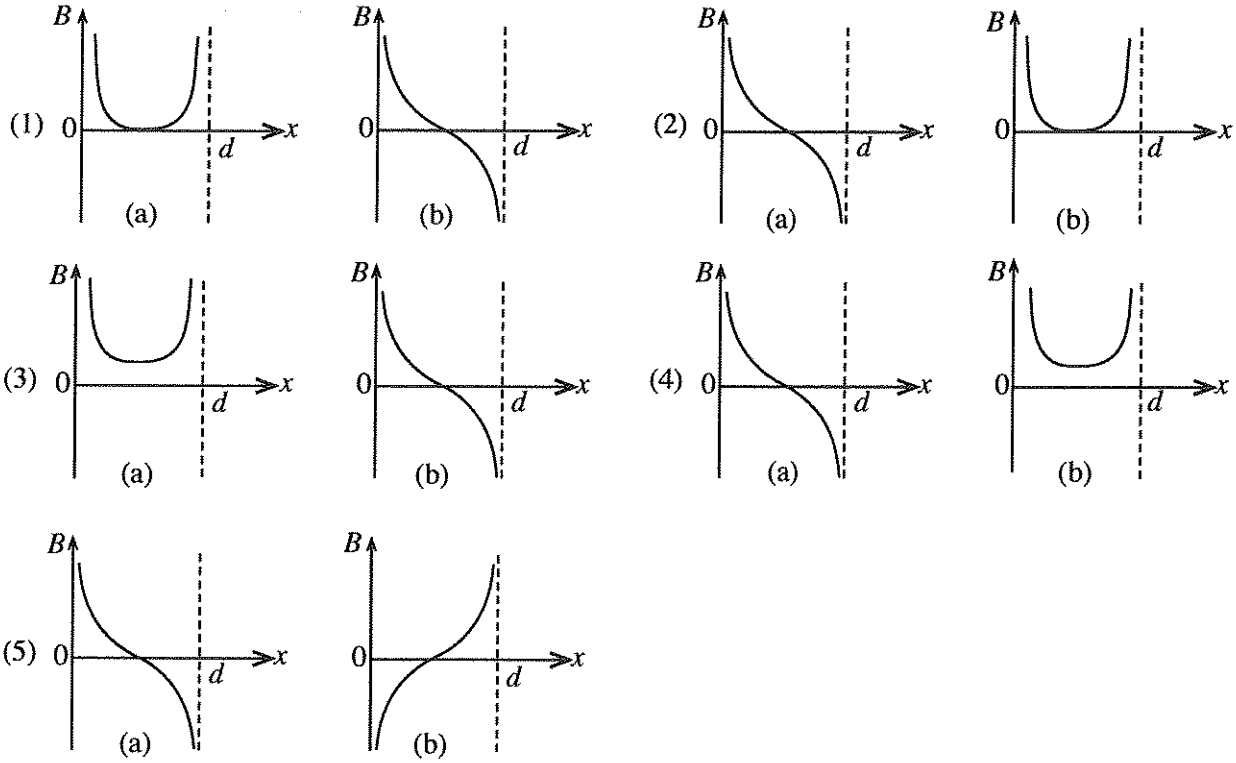

49. What is the current through the battery of the circuit shown in the figure?

(1) $\frac{V}{8R}$

(2) $\frac{V}{4R}$

(3) $\frac{V}{2R}$

(4) $\frac{V}{R}$

(5) $\frac{2V}{R}$

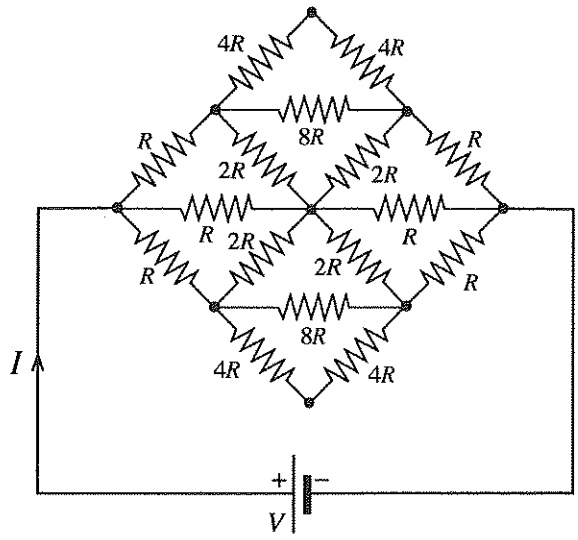

[See page twelve

50. A small object is placed inside a right circular cone with axis vertical and vertex down as shown in the figure. The coefficient of static friction between the inner surface of the cone and the object is μ. What is the maximum angular velocity of rotation of the cone about its axis for the object to be on the inner surface of the cone without slipping at a distance d away from the axis?

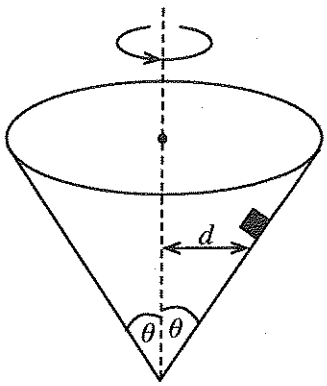

(1) $\sqrt{\frac{g(\cos\theta - \mu\sin\theta)}{d(\sin\theta + \mu\cos\theta)}}$

(2) $\sqrt{\frac{g(\sin\theta - \mu\cos\theta)}{d(\cos\theta + \mu\sin\theta)}}$

(3) $\sqrt{\frac{g(\cos\theta + \mu\sin\theta)}{d(\sin\theta - \mu\cos\theta)}}$

(4) $\sqrt{\frac{g(\sin\theta + \mu\cos\theta)}{d(\cos\theta - \mu\sin\theta)}}$

(5) $\sqrt{\frac{g}{d\tan\theta}}$

***

AL/2019/01-E-II(NEW)

සියලු ම හිමිකම් ඇවිරිණි/முழுப் பதிப்புரிமையுடையது/All Rights Reserved]

නව නිර්දේශය/புதிய பாடத்திட்டம்/New Syllabus

NEW

ශ්‍රී ලංකා විභාග දෙපාර්තමේන්තුව ශ්‍රී ලංකා විභාග දෙපාර්තමේන්තුව ශ්‍රී ලංකා විභාග දෙපාර්තමේන්තුව
இலங்கைப் பரீட்சைத் திணைக்களம் இலங்கைப் பரீட்சைத் திணைக்களம் இலங்கைப் பரீட்சைத் திணைக்களம்
Department of Examinations, Sri Lanka

අධ්‍යයන පොදු සහතික පත්‍ර (උසස් පෙළ) විභාගය, 2019 අගෝස්තු
கல்விப் பொதுத் தராதரப் பத்திர (உயர் தர)ப் பரீட்சை, 2019 ஓகஸ்ற்
General Certificate of Education (Adv. Level) Examination, August 2019

භෞතික විද්‍යාව II
பௌதிகவியல் II
Physics II

01 E II

13.08.2019 / 0830 - 1140

පැය තුනයි
மூன்று மணித்தியாலம்
Three hours

අමතර කියවීම් කාලය - මිනිත්තු 10 යි
மேலதிக வாசிப்பு நேரம் - 10 நிமிடங்கள்
Additional Reading Time - 10 minutes

Use **additional reading time** to go through the question paper, select the questions and decide on the questions that you give priority in answering.

Index No. : .....

Important:

- *This question paper consists of* **16** *pages.*
- *This question paper comprises of* ***two*** *parts, Part* **A** *and Part* **B.** *The time allotted for* ***both parts*** *is* ***three hours.***
- *Use of calculators is* ***not*** *allowed.*

PART A — Structured Essay:
(pages 2 - 8)

Answer ***all*** *the questions on this paper itself. Write your answers in the space provided for each question. Note that the space provided is sufficient for your answers and that extensive answers are not expected.*

PART B — Essay:
(pages 9 - 16)

This part contains ***six*** *questions, of which,* ***four*** *are to be answered. Use the papers supplied for this purpose.*

- *At the end of the time allotted for this paper, tie the* ***two parts together*** *so that* ***Part A*** *is* ***on top*** *of* ***Part B*** *before handing them over to the Supervisor.*
- *You are permitted to remove* ***only Part B*** *of the question paper from the Examination Hall.*

For Examiners' Use Only

For the second paper		
Part	**Question Nos.**	**Marks Awarded**
A	1	
	2	
	3	
	4	
B	5	
	6	
	7	
	8	
	9 (A)	
	9 (B)	
	10 (A)	
	10 (B)	
Total	In numbers	
	In words	

Code Numbers

Marking Examiner 1	
Marking Examiner 2	
Marks checked by	
Supervised by	

[see page two

PART A – Structured Essay

*Answer **all four** questions on this **paper itself**.*

(Consider acceleration due to gravity, $g = 10\,ms^{-2}$)

Do not write in this column

1. An experimental setup used in a school laboratory to determine the surface tension of a liquid is shown in figure (1).

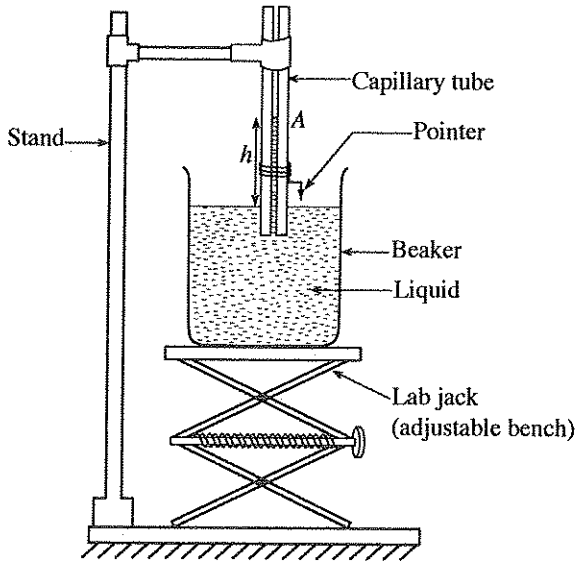

Figure (1)

(*a*) (i) Figure (2) shows the enlarged view of the vertical cross section of the capillary tube along the axis. Draw the meniscus of the liquid inside the capillary tube and indicate the surface tension T, and the contact angle θ between the liquid and the glass surface of the capillary tube in this figure.

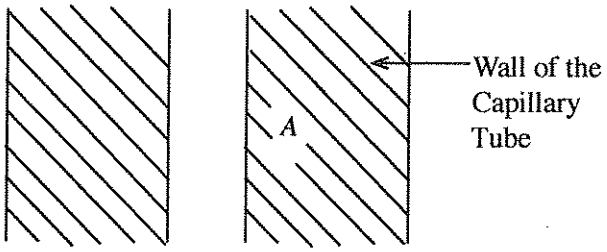

Figure (2)

(ii) If the height of the liquid column in the capillary tube, the inner radius of the capillary tube, and the density of the liquid are h, r, and ρ, respectively, obtain an expression for $h\rho g$ in terms of T, r, and θ.

.....

.....

(iii) Clearly writing the assumption made, show that the equation obtained in (ii) above can be reduced to $h = \frac{2T}{r\rho g}$.

.....

.....

.....

(iv) In order to satisfy the assumption mentioned in (iii) above for a given liquid, write down the experimental procedure that should be followed in **the correct order**.

.....

.....

.....

[*see page three*

Do not write in this column

(v) Before taking the readings required to determine the height h, what is the adjustment to be made in the experimental setup shown in figure (1)?

.....

.....

(*b*) The following graph shows the experimental data (in SI units) obtained using 6 capillary tubes with different radii to determine the surface tension of water.

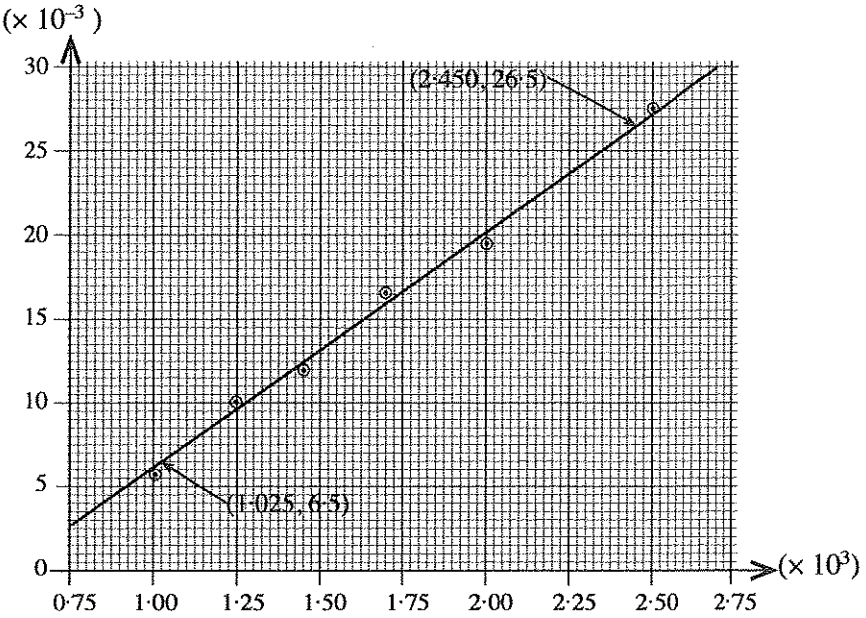

(i) Considering the equation in (*a*)(iii) above, identify and write down the independent variable (x) and the dependent variable (y) of the graph.

x: .....

y: .....

(ii) Determine the surface tension of water using the graph and state the answer with SI units. (Density of water is 1000 kg m^{-3}.)

.....

.....

.....

.....

(iii) What would happen to the capillary rise if soap water is used instead of water? Briefly explain the answer.

.....

.....

.....

[see page four

Do not write in this column

2. An incomplete diagram of an experimental setup to determine the thermal conductivity of a metal by the Searle's method is shown below.

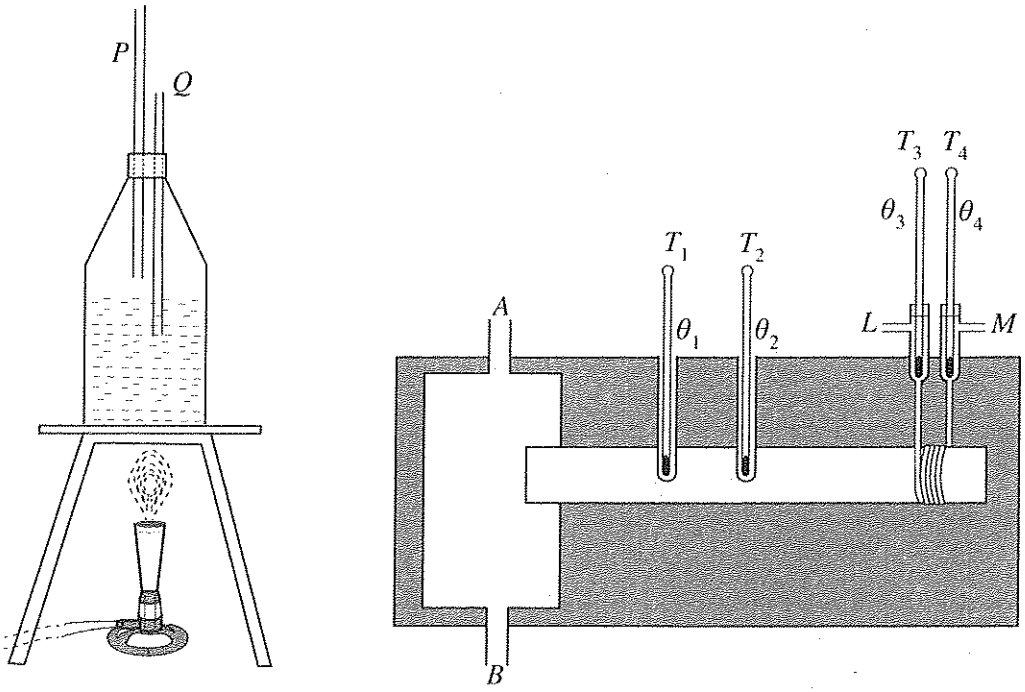

(*a*) What are the purposes of inserting tubes *P* and *Q* into the steam generator?

P: .....

Q: .....

(*b*) Proper connections of steam and water supply to Searle's apparatus are necessary to obtain the accurate result. Accordingly, select each connection and give reasons.

(i) Steam supply (*A* or *B*) : .....

Reason: .....

.....

(ii) Water supply (*L* or *M*) : .....

Reason: .....

.....

(*c*) State **three** more measuring instruments needed in this experiment and briefly state the specific measurement taken by each of them.

Instrument	Measurement
(i)	.....
(ii)	.....
(iii)	.....

(*d*) The separation between the thermometers T_1 and T_2 is 8·0 cm. If the constant temperature readings of T_1 and T_2 are 73·8 °C and 59·2 °C, respectively, calculate the temperature gradient.

.....

[*see page five*

Do not write in this column

(*e*) Does this temperature gradient vary along the rod? Briefly explain the answer.

.....

.....

(*f*) At thermal steady state, the difference in thermometer readings of T_3 and T_4 is 9·5 °C and the flow rate of water is 120 g per minute. Calculate the rate of heat absorption by water. (Specific heat capacity of water is 4200 J kg^{-1} K^{-1}.)

.....

.....

(*g*) If the cross-sectional area of the rod is 12·0 cm^2, calculate the thermal conductivity of the metal and state the answer with SI unit.

.....

.....

.....

(*h*) Is it possible to use the Searle's method to find thermal conductivity of a poor conductor? Briefly explain the answer.

.....

.....

3. A standard spectrometer, a glass prism, and a monochromatic light source are used to determine the refractive index of the glass.

(*a*) A few necessary adjustments are to be done to the spectrometer before starting to take measurements.

(i) What is the adjustment that should be done to the eyepiece?

.....

.....

(ii) Telescope is pointed to a distant object and it is adjusted until a clear image of the object is formed on the cross wires. What is the purpose of this adjustment?

.....

.....

(iii) What is the adjustment that should be done to the slit of the collimator?

.....

.....

(iv) The telescope is brought in line with the collimator. Then the collimator is adjusted until a sharp image of the slit is formed on the cross wires. What is the purpose of this adjustment?

.....

.....

[see page six

Do not write in this column

(*b*) In order to level the prism table, the prism is placed as shown in figure (1) and the screws P, Q, and R are adjusted.

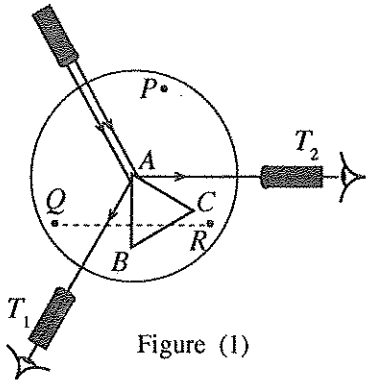

Figure (1)

(i) When the telescope is at position T_1, the screw Q is adjusted to obtain a symmetric image of the slit on the cross wires. When the telescope is moved to the position T_2, which screw should be adjusted to get a symmetric image of the slit?

.....

(ii) A student stated that the levelling of the prism table could easily be done using a spirit level. Is this statement correct? Briefly explain the answer.

.....

.....

(*c*) When the telescope is at positions T_1 and T_2, the readings of the spectrometer are 279° 58′ and 38° 02′, respectively. Note that the telescope passes the zero of the main scale when it is moved from T_1 to T_2. Calculate the prism angle A.

.....

.....

(*d*) To determine the angle of deviation of a light ray by the given glass prism, a student measured the incident and emergent angles i_1 and i_2, respectively, as shown in figure (2). The graph shows the variation of i_2 with i_1.

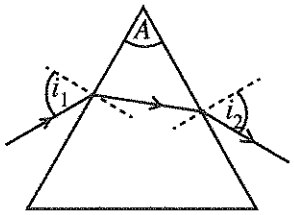

Figure (2)

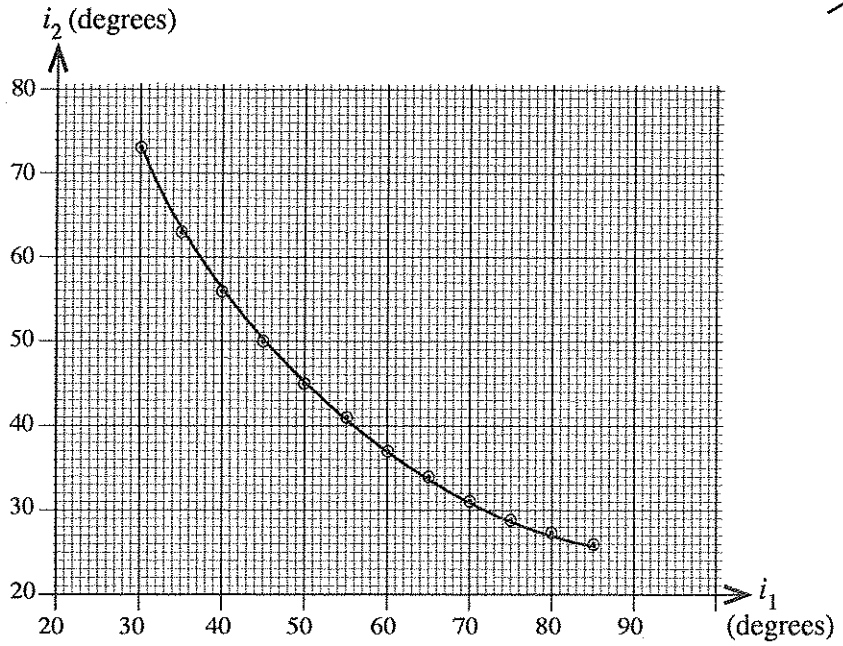

(i) Write down an expression for the angle of deviation d, in terms of the prism angle A, and the angles i_1 and i_2.

.....

(ii) Determine the minimum angle of deviation D by using the graph.

.....

.....

[see page seven

Do not write in this column

(iii) Calculate the refractive index of the glass that the prism is made of.

.....

.....

4. Figure (1) shows an experimental setup of a potentiometer with a 4 m long wire, that can be used to determine the internal resistance r of a given cell with electromotive force (emf) E ($< E_0$).

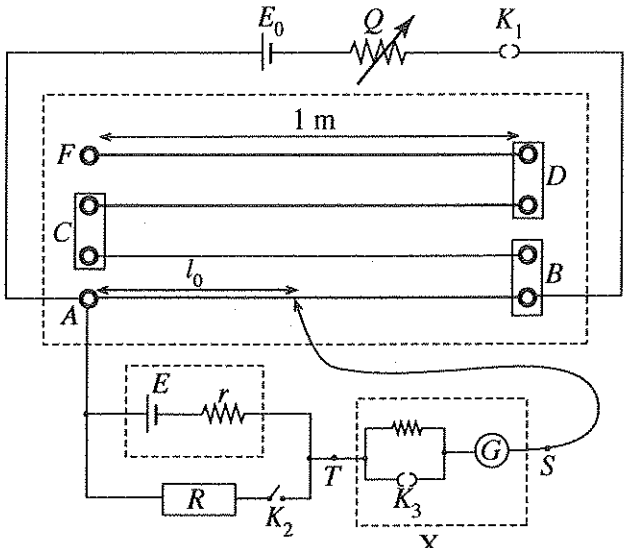

Figure (1)

(*a*) State **two** possible qualities of a potentiometer wire that affect the accuracy of measurements.

.....

.....

(*b*) Can the potentiometer shown in figure (1) be used as a voltmeter having an adjustable range? Give reasons for the answer.

.....

.....

(*c*) A student observed a small deflection of the galvanometer even when there is no current passing through it. Is it advisable to use this galvanometer for this experiment? Give reasons for the answer.

.....

.....

(*d*) When the switch K_2 is open, the balance length of the potentiometer wire is l_0. When K_2 is closed, the balance length is l. Obtain an expression for the internal resistance r of the given cell in terms of l, l_0, and R.

.....

.....

.....

.....

[see page eight

Do not write in this column

(*e*) With the given potentiometer, the balance length can be measured with a maximum error of 1 mm. If $R = 8\,\Omega$, $l_0 = 72{\cdot}4$ cm and $l = 50{\cdot}1$ cm, calculate the maximum value that could be obtained for the internal resistance r.

.....

.....

(*f*) Internal resistance r can be determined more accurately by a graphical method. Considering R as a variable resistor, rearrange the equation obtained in (*d*) to plot a suitable graph. Write down the independent (x) and dependent (y) variables of the graph.

.....

.....

x : .....

y : .....

(*g*) The potentiometer circuit shown in figure (1) can be modified by replacing the part of the circuit marked X in figure (1), by the circuit shown in figure (2). For this, the terminals S' and T' of the circuit shown in figure (2) are connected respectively to points S and T of the potentiometer circuit shown in figure (1).

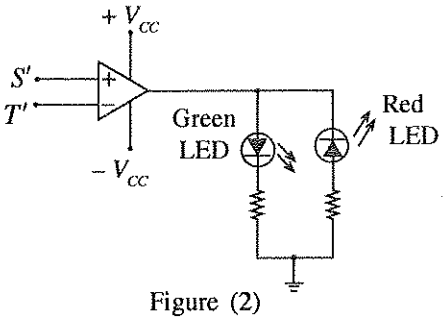

Figure (2)

(i) Assume that the balance point is located between A and B in the modified circuit. What is the colour of the Light Emitting Diode (LED) which is lit when the sliding key is placed at A and B?

At A : .....

At B : .....

(ii) Briefly explain how the balance point could be found using the modified circuit.

.....

.....

.....

(iii) State **two** advantages of this modified circuit in finding the balance point, when compared with the circuit shown in figure (1).

.....

.....

* *

[*see page nine*

සියලු ම හිමිකම් ඇවිරිණි/முழுப் பதிப்புரிமையுடையது/All Rights Reserved]

නව නිර්දේශය/புதிய பாடத்திட்டம்/New Syllabus

NEW

ශ්‍රී ලංකා විභාග දෙපාර්තමේන්තුව ශ්‍රී ලංකා විභාග දෙපාර්තමේන්තුව
இலங்கைப் பரீட்சைத் திணைக்களம் இலங்கைப் பரீட்சைத் திணைக்களம்
Department of Examinations, Sri Lanka

අධ්‍යයන පොදු සහතික පත්‍ර (උසස් පෙළ) විභාගය, 2019 අගෝස්තු
கல்விப் பொதுத் தராதரப் பத்திர (உயர் தர)ப் பரீட்சை, 2019 ஓகஸ்ற்
General Certificate of Education (Adv. Level) Examination, August 2019

භෞතික විද්‍යාව II பௌதிகவியல் II **Physics II**	**PART B — Essay**	**01 E II**

*Answer **four** questions only.*
(Consider the acceleration due to gravity $g = 10\,m\,s^{-2}$)

5. (*a*) In electric power generators, the frequency of the output voltage depends on the number of magnetic poles P and the number of revolutions per minute N of the generator. The frequency f in Hz is given by

$$f = \frac{P \times N}{120}.$$

A portable generator consisting of two magnetic poles typically works at 3000 revolutions per minute (rpm).

Find the following:

(i) The frequency of the output voltage of the generator

(ii) The rotational speed of the generator in radians per second (rad s^{-1}) (Take $\pi = 3$)

(*b*) A student has designed a model of a hydro-power plant by replacing the engine of the portable generator mentioned in (*a*) above, with a turbine that can be rotated by a water flow. He observed that the frequency of the output voltage varies with the consumption of electricity even at a constant water flow. To control the frequency variation of the output, he designed a controlling device to adjust the water flow to the turbine. Schematic diagram of the controlling device connected to a throttle valve is shown in figure (1).

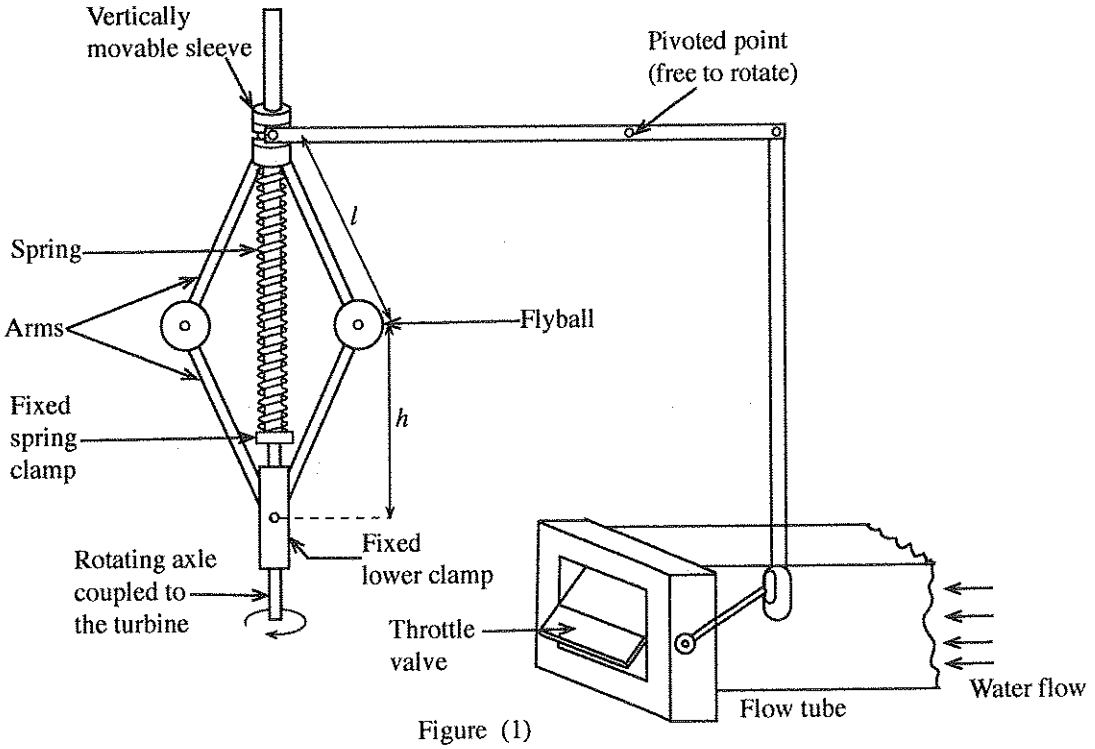

Figure (1)

Assume all the joints in this device are free to move without friction. During the rotation, flyballs move horizontally and it makes the sleeve move up and down along the rotating axle. This device is symmetric about the rotating axle. Opening and closing of the throttle valve is automatically controlled by the rotational speed of the turbine. All the other parts of the device can be assumed to be massless except the flyballs.

[see page ten

(i) Draw the free body force diagram for a flyball assuming each arm connected to it, is under tension. Consider the mass of a flyball to be m.

(ii) If the angular velocity of each flyball about the rotational axle is ω rad s^{-1}, show that the tensions in the upper and lower arms are respectively given by $\frac{ml}{2}\left(\omega^2 + \frac{g}{h}\right)$ and $\frac{ml}{2}\left(\omega^2 - \frac{g}{h}\right)$.

Here l is the length of each arm and h is the height to each flyball from the lower clamp.

(iii) When the frequency of the output voltage is 50 Hz, the value of h is 30 cm. Show that the contribution to the tension from the term $\frac{g}{h}$ can be neglected.

(iv) If m = 1 kg and l = 50 cm, calculate the tension in an upper arm.

(v) When the frequency of the output voltage is 50 Hz, the contraction of the spring is 20 cm. Determine the spring constant of the spring.

(*c*) When the frequency of the output voltage is 50 Hz, the throttle valve is set to block 50% of the flow. That is, the valve is making an angle of 45° with the axis of the flow tube as shown in figure (2). Assume that the closing of the throttle valve is proportional to the angle of the valve with the axis of the tube.

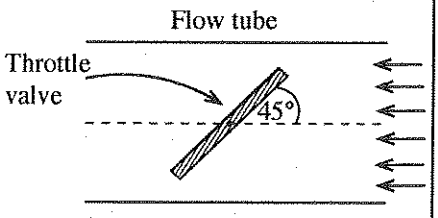

Figure (2)

The frequency of the output voltage depends on the consumption of electricity. When the consumption increases, the output frequency decreases and vice versa.

(i) According to the design, when the frequency of the output voltage becomes 25 Hz, the throttle valve will be fully opened. The valve will remain fully open even for frequencies lower than 25 Hz. Determine the following at the instant of fully opening the throttle valve. (Neglect the contribution from the term $\frac{g}{h}$)

(1) Tension of an upper arm

(2) Contraction of the spring

(ii) When the frequency of the output voltage increases, the throttle valve closes gradually to decrease the flow rate. If the flow is to be blocked by 75%, what should be the frequency of the output voltage?

6. (*a*) (i) Draw the standing wave patterns of the fundamental mode and the first two overtones produced by a vibrating stretched string, in **three** separate diagrams. Mark the nodes as '*N*' and the antinodes as '*A*' in the diagrams. (Neglect end corrections.)

(ii) Obtain an expression for the frequency f_n of the nth harmonic in terms of n, T, l, and m, where T is the tension, l is the length, and m is the mass per unit length of the string.

(iii) For a given string, state **two** possible ways of changing the harmonic frequencies.

(*b*) A harp like musical instrument shown in figure (1) consists of 7 identical stretched strings with different lengths. The longest string of length l_1, produces the musical note 'C' (සෙ, ஸ) with the fundamental frequency of 260 Hz. The corresponding lengths of the strings which produce all the musical notes are given in the table as fractions of l_1.

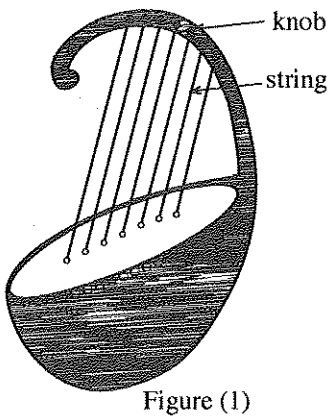

Figure (1)

Musical Notes	සෙ C ஸ	රේ D ரி	ගා E க	මා F ம	පා G ப	ධා A த	නී B நி
$\frac{l}{l_1}$	1·00	0·89	0·79	0·70	0·67	0·59	0·53

(i) If all the strings are under the same tension, calculate the fundamental frequencies of musical notes 'F'(මා, ம) and 'B' (නී, நி).

(ii) To obtain a correct musical note, the frequency can be fine tuned by adjusting the tension of the string. By what percentage should the tension of the string be adjusted to change the frequency by 1%?

[see page eleven

(*c*) A student designs and builds a set of panpipes to produce musical notes given in the above table, by using narrow PVC pipes with different lengths as shown in figure (2). Lower end of all the pipes are closed with corks.

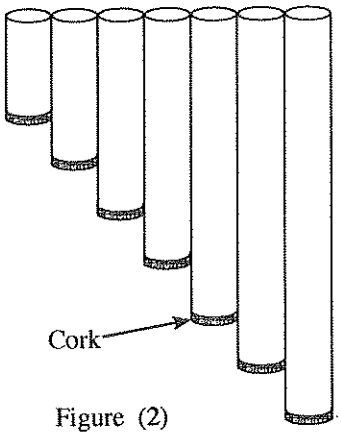

Figure (2)

(i) Draw the standing wave patterns of the fundamental mode and the first two overtones produced by a one end closed pipe of length L, in **three** separate diagrams. Mark the nodes as 'N' and the antinodes as 'A' in the diagram. (Neglect end corrections.)

(ii) Calculate the required lengths of the pipes in cm, which produce the musical notes 'C'(ඍ, ஸ) and 'B' (නි, நி). Assume that the velocity of sound in air at room temperature is 340 m s^{-1}.

(iii) The longest pipe is found to be producing a frequency of 255 Hz instead of 260 Hz. By what distance should the cork be moved to obtain the frequency of 260 Hz.

(iv) If the cork fell completely out of a pipe, what would happen to the fundamental frequency produced by the pipe? Justify the answer with a suitable diagram.

7. When an object is falling through a viscous medium, it is subjected to the buoyant force and the drag force. The buoyant force pushes the object upward while the drag force acts against the motion of the object with respect to the medium.

(*a*) The drag force for a solid spherical object falling in a liquid medium can be expressed by the Stokes' Law.

(i) Write down the Stokes' formula for a solid spherical object and name the parameters.

(ii) Write down **two** assumptions that are used in deriving the Stokes' formula.

(*b*) Consider an air bubble rising gradually upward in a viscous fluid. Stokes' Law can be applied to determine the time taken by an air bubble to reach the surface of the fluid. Neglecting the effect of the pressure change with height, the instantaneous velocity $V(t)$ of an air bubble in a viscous medium at a given time t can be given by $V(t) = V_T\left(1 - e^{-\frac{t}{\tau}}\right)$, where V_T and τ are the terminal velocity and the relaxation time of the motion of the air bubble, respectively.

(i) If the relaxation time for the motion of an air bubble in a viscous medium is 4 μs, calculate the time it takes for the instantaneous velocity to be 50% of V_T from the rest (Take $\ln 0{\cdot}5 = -0{\cdot}7$)

(ii) Calculate the time taken by the air bubble to increase the instantaneous velocity from 50% to 90% of V_T. (Take $\ln 0{\cdot}1 = -2{\cdot}3$)

(iii) Considering the answers obtained in (*b*)(i) and (*b*)(ii) above, plot the variation of the instantaneous velocity of the air bubble as a function of time. Clearly indicate V_T on the graph.

(*c*) Consider an air bubble rising from the bottom of an oil tank which is filled upto 10 m height.

(i) Obtain an expression for the resultant force acting on the air bubble in terms of η, ρ_o, ρ_a, a, and v, where η is the coefficient of viscosity of oil, ρ_o is the density of the oil, ρ_a is the density of air, a is the radius of the air bubble, and v is the velocity of the air bubble.

(ii) It is given that $\eta = 7{\cdot}5 \times 10^{-2}$ Pa s, $\rho_o = 900$ kg m^{-3}, $\rho_a = 1{\cdot}225$ kg m^{-3}, and the average radius of an air bubble $a = 0{\cdot}1$ mm. Neglecting the weight of the air bubble, and the effect due to the variation of pressure with height, calculate the terminal velocity of the air bubble.

(iii) Calculate the radius of the air bubble just below the surface of the oil, if the internal pressure of the bubble is 100·33 kPa, atmospheric pressure is 100 kPa, and the surface tension of oil is $2{\cdot}0 \times 10^{-2}$ N m^{-1}.

(iv) Considering the change in radius of the air bubble with height, sketch the variation of its instantaneous velocity with time.

[see page twelve

8. (*a*) (i) A current I flows through a thin wire of very small length Δl. Show that the magnetic flux density ΔB at a point with a perpendicular distance d away from this wire, is given by $\frac{\mu_0 I \Delta l}{4\pi d^2}$.

(ii) A current I flows through a flat circular coil of radius R with N number of turns as shown in figure (1). Obtain an expression for the magnitude of the magnetic flux density B at the centre of the coil.

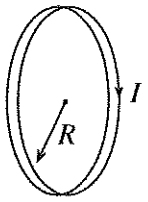

Figure (1)

(iii) Two such coils are placed coaxially with a separation R as shown in figure 2(a). The current I flows through both coils in the same direction. Figure 2(b) shows the vertical cross section of the coils through the common axis.

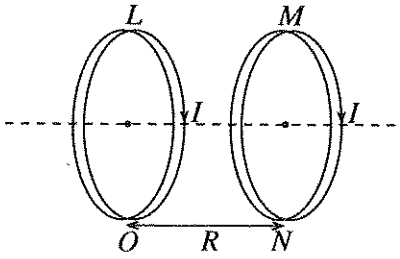

Figure 2(a)

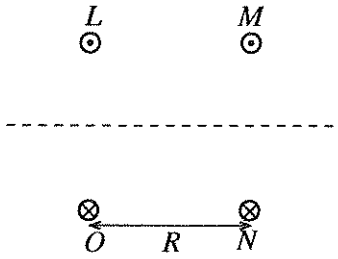

Figure 2(b)

Copy the figure 2(b) onto the answer script and draw the magnetic field lines to illustrate the magnetic field due to both coils.

(*b*) The apparatus shown in figure (3) can be used to determine the charge to mass ratio $\left(\frac{e}{m_e}\right)$ of an electron. The vacuum tube has a filament cathode C, electrodes A_1 and A_2, and a vertical fluorescent screen S with grid lines. The path of the electron beam can be seen on the fluorescent screen.

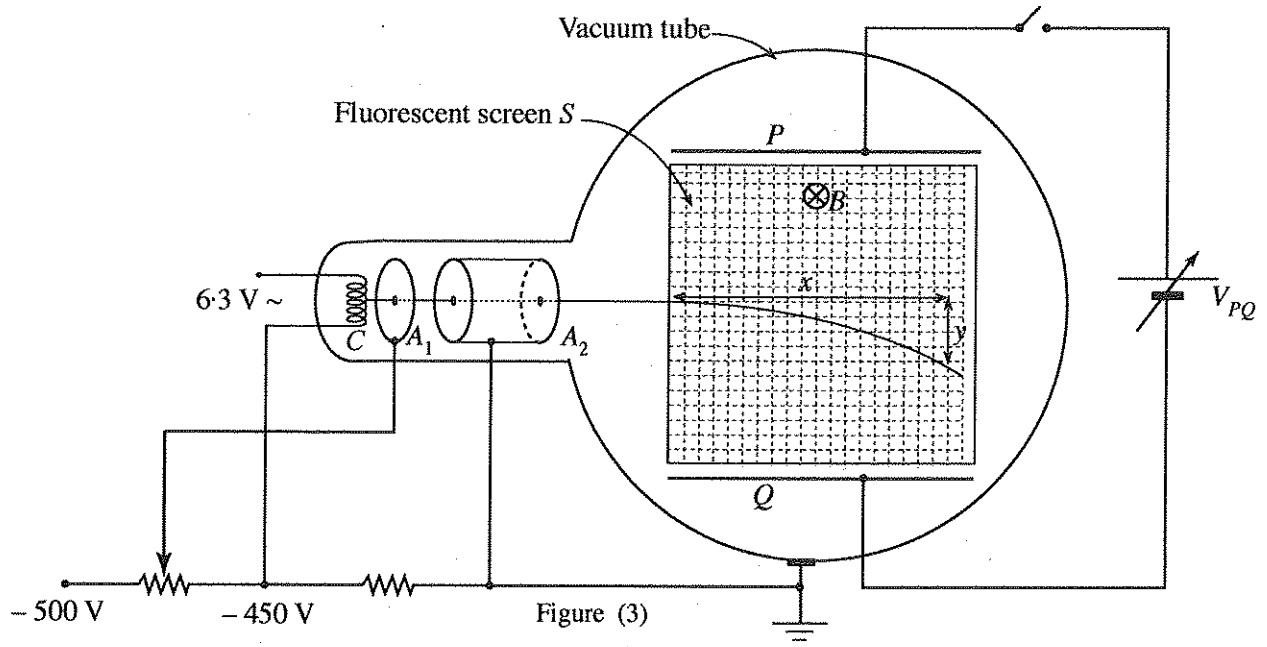

Figure (3)

(i) The function of the electrode A_1 is to control the intensity of the electron beam. What is the function of the electrode A_2?

(ii) If a negative voltage ($-V$) is applied to electrode A_1, obtain an expression for the speed of an electron travelling through the electrode A_2. (Charge of an electron is $-e$ and mass of an electron is m_e.)

(iii) The spherical part of the tube is placed between two flat circular coils carrying the same current as shown in figure (4). Thereby a uniform magnetic field B is applied perpendicularly to the screen S. This makes the electrons move in a circular path.

If the radius of the path of the electron beam is r, obtain an expression for the ratio $\left(\frac{e}{m_e}\right)$ of the electron.

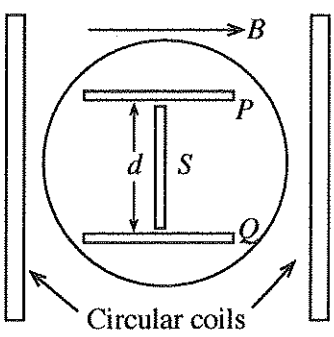

Figure (4)

[see page thirteen

(*c*) A dc voltage can be applied between two parallel metal plates P and Q as shown in figure (3). The plates P and Q are separated by a distance d as shown in figure (4). While the magnetic field B is applied, the potential difference between the plates V_{PQ} can be adjusted until there is no deflection of the electron beam. This process can be utilized as an alternative way to determine the speed of the electrons.

(i) Draw the electric and magnetic forces acting on an electron within the plates P and Q, after the above adjustment is done.

(ii) Obtain an expression for the speed of the electrons in terms of d, B and V_{PQ}.

(iii) When B = 1 mT and V_{PQ} = 0, the radius of the path of the electrons is 6 cm. When V_{PQ} = 840 V, there is no deflection of the electron beam. The separation between the plates P and Q is 8 cm.
Calculate
(1) the speed of an electron, and
(2) the charge to mass ratio $\left(\frac{e}{m_e}\right)$ of an electron.

9. Answer either part (A) or part (B) only.

Part (A)

(*a*) The electromotive force (emf) of an electric source is defined as the work done by the source on a unit charge. Using this definition;

(i) determine the units of emf.

(ii) obtain an expression for the power generated by a source in terms of its emf E and the current I flowing through it.

(*b*) A source of emf E and internal resistance r is connected to an external resistor with resistance R. Obtain an expression for the total energy dissipated in the circuit in time t, in terms of E, r, R, and t.

(*c*) Consider an electrochemical battery of a car that powers the starter motor and the headlamps as shown in the circuit of figure (1). Rated power of each headlamp is 60 W. The internal resistance of the battery is 0·03 Ω. Consider that the ammeter behaves as an ideal ammeter.

When only the headlamps are turned on (S_1 is closed) without starting the car (S_2 is open), the voltmeter shows a value of 12·0 V.

(i) What is the reading of the ammeter?

(ii) What is the resistance of a headlamp?

(iii) Calculate the emf of the battery.

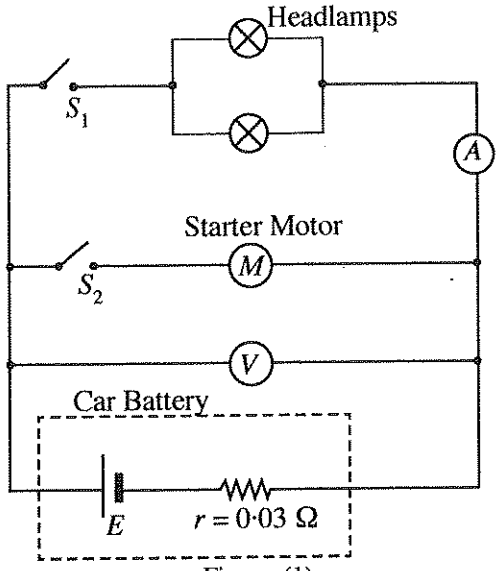

Figure (1)

(*d*) When the starter motor is just turned on (S_2 is just closed) while the headlamps are ON, the ammeter shows a value of 8·0 A. Calculate,

(i) the current through the starter motor, and

(ii) the resistance of the starter motor.

(*e*) When the armature of the starter motor is rotating while the headlamps are ON, the current through the starter motor is 34·2 A and the voltmeter reading is 11·0 V.

Calculate,

(i) the back emf, and

(ii) the efficiency of the starter motor, at this instant.

(*f*) Sketch the variation of the back emf E_b of the motor with the current flowing through it.

[see page fourteen

(*g*) The battery discharged considerably because the driver parked the car without turning off the headlamps on a certain night. As a result, emf of the battery dropped to 10·8 V and its internal resistance increased to 0·24 Ω. The current through the starter motor was not sufficient to rotate it due to the discharge of the battery. Find the current through the starter motor at this instance.

(*h*) In the situation mentioned in (*g*) above, the driver used an external battery with an emf 12·3 V and an internal resistance 0·02 Ω to jump start the car. For this, the external battery was connected to the discharged battery using two jumper cables, each having a resistance of 0·015 Ω and the car was then started.

(i) Draw the circuit diagram showing the connections to the external battery with the discharged battery, when jump starting the car.

(ii) Calculate the **maximum** current through the starter motor when starting the engine.

Part (B)

(*a*) (i) Why Field Effect Transistors (FET) are called unipolar devices? What are the charge carriers contributing to the operation of FETs?

(ii) State why FETs are also known as voltage-controlled devices.

(iii) Calculate the drain current I_D and the Gate-Source voltage V_{GS} for the circuit shown in figure (1), assuming V_D = 5 V.

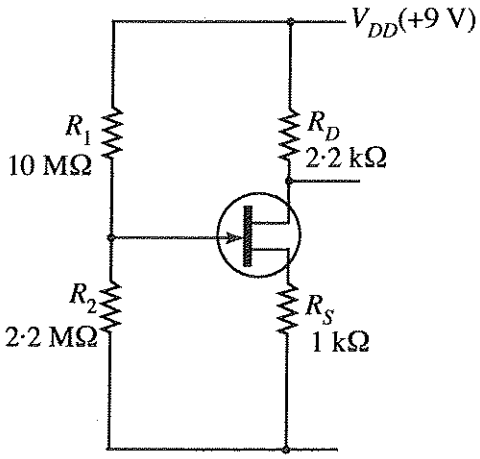

Figure (1)

(*b*) In the Op–amp circuit shown in figure (2), each electromechanical switch S_i (i = 0, 1, 2, 3) is operated by applying an electrical signal D_i (i = 0, 1, 2, 3) which can be 'High' (5 V) or 'Low' (0 V). When D_i is 'High' the respective switch S_i will be closed and otherwise, it will be open.

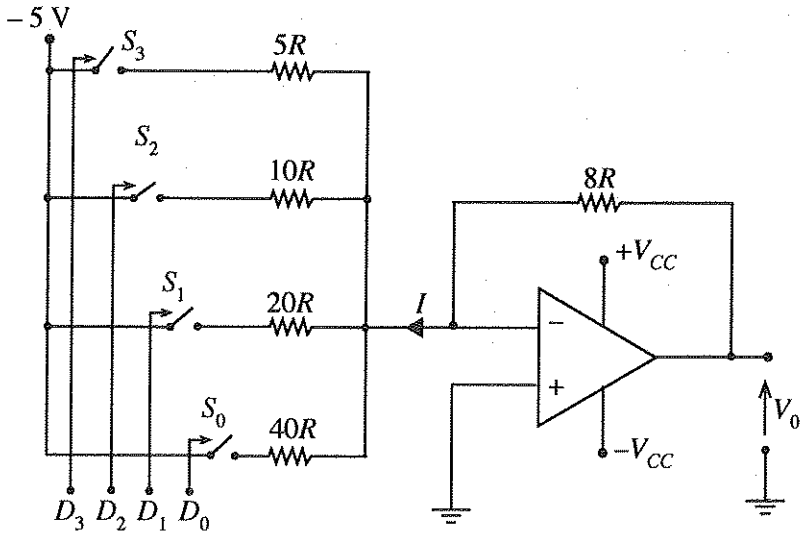

Figure (2)

(i) When D_2 is 'High', find the current through the resistor 10R in terms of R.

(ii) If a set of voltages (5 V, 0 V, 5 V, 5 V) is applied simultaneously to operate the switches S_3, S_2, S_1, S_0, respectively, calculate the current I indicated in figure (2) in terms of R.

(iii) Calculate the output voltage V_0 when a set of voltages (5 V, 5 V, 5 V, 5 V) is applied simultaneously to operate the switches S_3, S_2, S_1, S_0, respectively.

[see page fifteen

(*c*) A cash operated snack dispenser will provide a pack of '*Marie*' or '*Chocolate Cream*' biscuits under the following conditions.

- The correct amount of cash is inserted (*I*)
- '*Marie*' (*M*) or '*Chocolate Cream*' (*C*) is selected
- If '*Marie*' is selected, 'Availability of *Marie*' in the dispenser (*X*)
- If '*Chocolate Cream*' is selected, 'Availability of *Chocolate Cream*' in the dispenser (*Y*)

(i) Obtain the logic expression for the conditions under which a pack of biscuits may be obtained.

(ii) Show how this may be implemented using logic gates.

10. Answer either part (A) or part (B) only.

Part (A)

(*a*) (i) State the Boyle's law and the Charles' law.

(ii) Derive the ideal gas equation using the above laws.

(*b*) A deflated tyre of volume V and initial pressure P_0, at room temperature T_R is connected to a compressed nitrogen (N_2) gas tank via a valve. The tyre initially contains only N_2 gas. After inflating the tyre with N_2 gas, its final pressure is P and it contains a total of n number of N_2 moles. Assume that there is no change in volume of the tyre.

(i) Assuming that the N_2 gas inside the tyre behaves like an ideal gas, show that the number of moles of N_2 gas pumped into the tyre is $n\left(1-\frac{P_0}{P}\right)$.

(ii) Obtain an expression for the work done to inflate the tyre with N_2 gas.

(iii) Assuming that the pumping process of N_2 gas is adiabatic, show that the change in the temperature of the N_2 gas inside the tyre is $\frac{2}{5}\left(1-\frac{P_0}{P}\right)T_R$. The change in internal energy of an ideal gas is given by $\Delta U = n\, C_V\, \Delta T$, where C_V is the molar heat capacity at constant volume and ΔT is the change in temperature. The molar heat capacity at constant volume of a diatomic ideal gas is $\frac{5R}{2}$, where R is the universal gas constant.

(iv) This change in temperature, increases the pressure temporarily to a higher value. Show that this change in pressure is $\frac{2}{5}\left(P - P_0\right)$.

(*c*) Gauge pressure is the pressure measured relative to atmospheric pressure. Gauge pressure of a tyre is usually expressed in psi (pound per square inch) units. ($1\,\text{atm} \simeq 100\,\text{kPa}$ and $1\,\text{psi} \simeq 7\,\text{kPa}$)

A deflated tyre at 20 psi pressure is pumped further with N_2 gas to a pressure of 30 psi at room temperature (27° C).

(i) Calculate the change in temperature of N_2 gas in the tyre.

(ii) Calculate the maximum pressure in the tyre due to this change in temperature.

(iii) Usually this temporary increase in pressure is not observable when pumping N_2 gas further to a deflated tyre. Give **two** possible reasons for not observing the increase in pressure.

Part (B)

Read the following passage and answer the questions.

Radioactivity is a spontaneous decay process by which an unstable nucleus becomes a stable nucleus by emitting radiation. Decay rate is directly proportional to the number of radioactive atoms present at that instant but independent of external physical conditions.

Radioactive iodine ^{131}I is used in nuclear medicine to treat patients with thyroid cancer. The half-life time of ^{131}I is 8 days. It decays to stable ^{131}Xe initially by emitting a β^- particle and then by emitting a γ-photon. The maximum tissue penetration length of this β^- is 2 mm. Usually ^{131}I is administered to patients as sodium iodide ($Na^{131}I$) in the form of a capsule. Once administered, it is absorbed into the blood stream and concentrated in the thyroid gland. Radiation emitted from ^{131}I kills most of the cancer cells in the thyroid gland.

[*see page sixteen*

Since the patient becomes a potential source of radiation, precautions must be taken to minimize the radiation exposure to others around. The amount of radiation emitted by the patient is proportional to the activity of the dose administered. In medical practice, the common unit used for activity is Curie (Ci) which is not an SI unit. One Curie is equal to 37×10^9 disintegrations per second.

A radioactive material inside the body, diminishes not only by radioactive decay but also by biological clearance. This clearance is purely a biological process and follows an exponential variation, characterized by the decay constant λ_b. Hence the effective decay constant λ_e, due to both radioactive decay and biological clearance can be stated as $\lambda_e = \lambda_p + \lambda_b$, where λ_p is the decay constant corresponding to physical radioactive decay. The effective half-life time, which is used for radiation protection measures, is calculated from the effective decay constant.

(*a*) (i) State **two** differences between the emissions of β^- and γ.

(ii) Rewrite the following decay equation replacing a, b, and c with correct numbers.

$$^{131}_{53}\text{I} \longrightarrow {}^{131}_{a}\text{Xe} + {}^{b}_{c}\beta^-$$

(*b*) A fresh sample of $Na^{131}I$, having an activity of 100 mCi is received by a hospital. The sample is stored in a lead container at room temperature.

(i) What is the SI unit used for activity?

(ii) Write down an expression for the decay constant λ in terms of half-life time T.

(iii) Calculate the activity of the above sample after 4 days and express the answer in SI units. (Take ln 2 = 0·7 and $e^{-0.35} = 0.7$)

(iv) Hence, express the change in activity as a percentage.

(v) Is it possible to reduce the activity of the $Na^{131}I$ sample if it is stored at 0 °C instead of storing at room temperature? Explain the answer.

(*c*) A small amount of $Na^{131}I$ sample having an activity of 100 mCi is administered to a thyroid patient.

(i) When dealing with such a patient, for which mode of emission, the radiation protection measures should be taken? Explain the answer.

(ii) Show that the effective half-life time T_e of ^{131}I in thyroid gland can be given by $\frac{1}{T_e} = \frac{1}{T_p} + \frac{1}{T_b}$, where T_p and T_b are the half-life times due to radioactive decay and biological clearance, respectively.

(iii) If the biological half-life time of ^{131}I in thyroid gland is 24 days, calculate the effective half-life time of ^{131}I (in days).

(iv) Calculate the percentage change in the activity after 4 days of administration of ^{131}I. (Take $e^{-0.46} = 0.63$)

(v) According to radiation protection regulations, ^{131}I treated patients can be discharged from the hospital when the activity is below or equal to 50 mCi. If this regulation is followed, how long the above ^{131}I treated patient has to be kept in isolation in the hospital before discharging?

***