සියලු ම හිමිකම් ඇවිරිණි / முழுப் பதிப்புரிமையுடையது / All Rights Reserved]

ශ්‍රී ලංකා විභාග දෙපාර්තමේන්තුව
இலங்கைப் பரீடசைத் திணைக்களம்
Department of Examinations, Sri Lanka

අධ්‍යයන පොදු සහතික පත්‍ර (උසස් පෙළ) විභාගය, 2024
கல்விப் பொதுத் தராதரப் பத்திர (உயர் தர)ப் பரீடசை, 2024
General Certificate of Education (Adv. Level) Examination, 2024

තොරතුරු හා සන්නිවේදන තාක්ෂණය I
தகவல், தொடர்பாடல் தொழினுட்பவியல் I
Information & Communication Technology I

20 E I

පැය දෙකයි
இரண்டு மணித்தியாலம்
Two hours

Instructions:

- *Answer **all** the questions.*
- *Write your **Index Number** in the space provided in the answer sheet.*
- *Instructions are also given on the back of the answer sheet. Follow those carefully.*
- *In each of the questions **1** to **50,** pick one of the alternatives from* (1), (2), (3), (4), (5) *which is **correct or most appropriate** and **mark your response on the answer sheet with a cross** (x) **in accordance with the instructions given on the back of the answer sheet.***
- *Use of calculators is **not allowed.***

1. Consider the following data:
A – temperature values given by a sensor
B – creator's name and the date of creation of a file saved in a computer
C – collection of posts and responses shared on a social media platform
Which of the following correctly categorizes the above data?

(1) A – big data, B – continuous data, C – metadata (data about data)
(2) A – continuous data, B – big data, C – metadata
(3) A – continuous data, B – metadata, C – big data
(4) A – metadata, B – big data, C – continuous data
(5) A – metadata, B – continuous data, C – big data

2. Which of the following are good examples for *batch processing*?
A – a system that outputs the presently vacant vehicle parking space closest to a user
B – a system that automatically backs up the files in a computer at the end of each day
C – a system that sorts the customer orders received during a day according to value

(1) A only (2) A and B only (3) A and C only
(4) B and C only (5) All A, B and C

3. Select the answer containing the correct replacements for Ⓐ and Ⓑ in the following paragraph:
Although .....Ⓐ..... is very old, it still plays a central role in the daily operations of the world's largest corporations. In addition to its power, the other main reason for its popularity is its .....Ⓑ..... .

(1) A – cloud computing B – non-reliance on the Internet
(2) A – cloud computing B – non-reliance on service providers
(3) A – the main frame computer B – low cost
(4) A – the main frame computer B – reliability
(5) A – the main frame computer B – small size

4. A village of houses constructed mainly with the aid of a *special equipment* is nearing completion in the United States of America. This equipment has been used to construct the walls of the houses with the foundations and the roofs constructed in the traditional way. This equipment reduces the number of workers required for the construction process and has made the process faster and cheaper with minimized construction waste. What could be this special equipment?

(1) a digitizer (2) a large 3D printer (3) a plotter
(4) a pointing device (5) a joystick

[See page two

5. The figure below shows some components and connections on a computer motherboard.

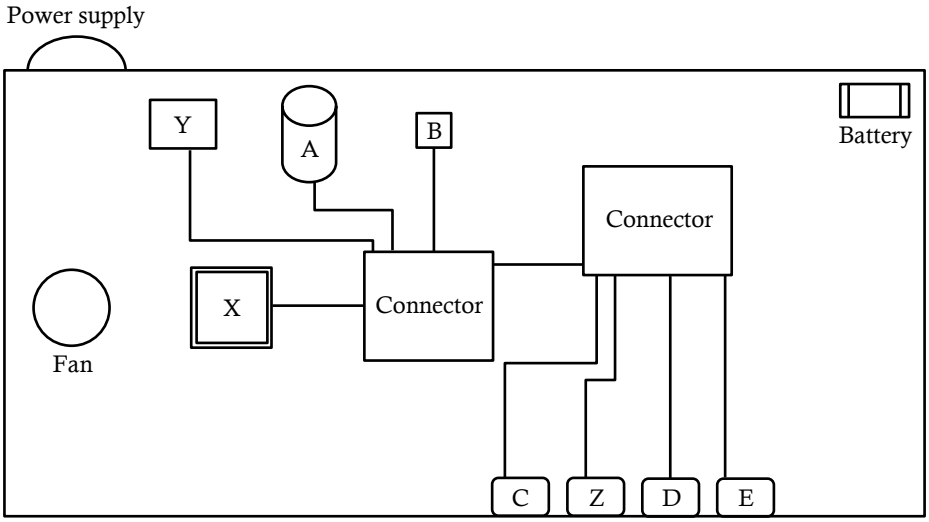

The labels A–E indicate the following:

A – hard disk
B – ROM BIOS
C – connector for audio port
D – connector for network port
E – connector for USB port

What are indicated by the labels X, Y and Z respectively?

(1)	X – connector for video port	Y – CPU	Z – memory
(2)	X – connector for video port	Y – memory	Z – CPU
(3)	X – CPU	Y – memory	Z – connector for video port
(4)	X – CPU	Y – connector for video port	Z – memory
(5)	X – memory	Y – connector for video port	Z – CPU

6. A person notes that a desktop computer was booting very fast from the hard disk after the computer was repaired. Which of the following would have been done during the repair?

(1) decreasing RAM and reinstalling the operating system
(2) formatting the hard disk only
(3) installing a new CD drive only
(4) replacing the small fan inside the computer only
(5) replacing the hard disk with a Solid-state Drive (SSD) and reinstalling the operating system

7. What is the correct binary equivalent of decimal 14.25_{10}?

(1) 1001.10 (2) 1010.11 (3) 1011.01 (4) 1110.01 (5) 1111.10

8. What is the correct decimal equivalent of octal 120_8?

(1) 10 (2) 17 (3) 80 (4) 136 (5) 640

9. Which of the following are correct?

I : $EB7_{16} = 1110\ 1011\ 0111_2$
II : $84_{10} = 1010100_2$
III : $753_8 = 1001011_2$

(1) I only (2) I and II only (3) I and III only
(4) II and III only (5) All I, II and III

[*See page three*

10. The second and third rows of the following table contain two English words and their binary representations according to the ASCII code. The binary representation of No! is kept blank.

Word	Binary representation
no	1101110 1101111
N!	1001110 0100001
No!	

What is the correct replacement for the blank?

(1) 0100001 1001110 1101111
(2) 1001110 0100001 1101111
(3) 1001110 1101111 0100001
(4) 1101110 0100001 1101111
(5) 1101110 1101111 0100001

11. $11001_2 + 10001_2 =$

(1) 101010_2 (2) 101011_2 (3) 101100_2 (4) 111001_2 (5) 111010_2

12. Which of the following expresses the output (F) of the given circuit?

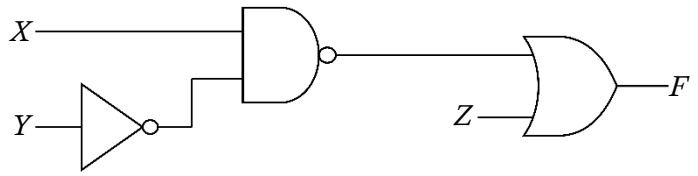

(1) $(X + \overline{Y})Z$ (2) $\overline{(X + \overline{Y})} + Z$ (3) $\overline{(X + \overline{Y})}Z$ (4) $X\overline{Y} + Z$ (5) $\overline{(X\overline{Y})} + Z$

13. Applying *Double complement* and *De Morgan's* laws to $\bar{x} + yz$ results in

(1) $xy + \overline{z}$ (2) $x\bar{y} + z$ (3) $\bar{x}\bar{y}z$ (4) $\overline{x(\overline{yz})}$ (5) $\bar{x}\bar{y} + yz$

14. What is the most simple Boolean expression that can be obtained through the given Karnaugh map?

z \ xy	00	01	11	10
0	0	1	1	1
1	0	1	1	0

(1) y (2) xz (3) $x\bar{z}$ (4) $\bar{x}z$ (5) $y + x\bar{z}$

15. Which of the following are correct regarding the *Process Control Block (PCB)?*

A – It is a data structure used by the operating system to manage information about a process.
B – It is created during the compilation of a program.
C – The *Program Counter* values of two PCBs can be the same.

(1) A only (2) A and B only (3) A and C only
(4) B and C only (5) All A, B and C

[*See page four*

16. Amara switches on a multi-user computer system. After it has booted, Sama logs on to the computer from a terminal and starts a web browser. After sometime, Sama starts a text editor also to work on her Python program. Then Rani also logs on to the computer from another terminal and starts a web browser.
Which of the following are possible execution sequences on the processor of this computer?
(1) BIOS → OS → Sama's web browser process → OS → Sama's text editor process → OS → Rani's web browser process → OS → Sama's text editor process → ...
(2) BIOS → OS → Sama's web browser process → Sama's text editor process → OS → Rani's web browser process → OS → Sama's web browser process → ...
(3) BIOS → Sama's web browser process → Sama's text editor process → OS → Rani's web browser process → OS → Sama's text editor process → ...
(4) OS → BIOS → Sama's web browser process → OS → Sama's text editor process → OS → Rani's web browser process → OS → Sama's web browser process → ...
(5) OS → BIOS → Sama's web browser process → Sama's text editor process → OS → Rani's web browser process → OS → Sama's web browser process → ...

17. Each block of a disk is 512 bytes. When a file of size 1959 bytes is stored on that disk, how many bytes allocated to the file would be wasted?
(1) 89 (2) 423 (3) 512 (4) 601 (5) 1447

18. Which of the given statements (I, II, III) are true with respect to the following two diagrams?
(Note: V – Voltage, t – time)

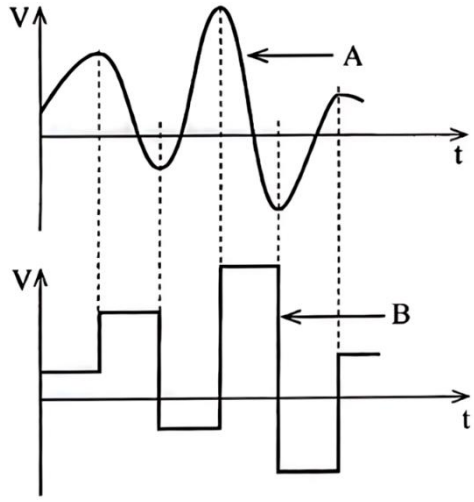

I – A depicts an analog signal.
II – B depicts a digital signal.
III – B is a digitized version of A.

(1) I only (2) II only (3) III only
(4) II and III only (5) All I, II and III

19. Which of the following is correct regarding parity bits?
(1) The parity bit in a set of bits is adjusted after that set of bits is communicated.
(2) The parity bit for a set of bits is selected to ensure the total number of 1-bits in the set is either even or odd.
(3) The transmission speed of a communication is increased by parity bits.
(4) Parity bits are added after a communication to correct errors.
(5) Encryption needed in a data transmission is provided by parity bits.

20. What is done by a modem when it receives an analog signal from a PSTN (Public Switched Telephone Network) line?
(1) It amplifies the signal for better clarity.
(2) It compresses the signal for storage.
(3) It demodulates the signal back into digital form.
(4) It encrypts the signal for security.
(5) It modulates the signal further for transmission.

[*See page five*

21. Which of the following best describes a *switch* in a network?
(1) It amplifies data signals for clearer transmission.
(2) It always broadcasts all incoming data to every device in the network.
(3) It compresses data for more efficient transmission.
(4) It directs data only to the specific device for which the data is intended.
(5) It stores data for future processing.

22. How many usable host addresses are available in the 192.168.100.0/27 IP address block?
(1) 16 (2) 30 (3) 32 (4) 62 (5) 64

23. Which of the following are properties of the Transmission Control Protocol (TCP)?
A – detection and correction of any errors in a communication
B – receiver acknowledging to the sender about the receipt of a data packet
C – ensuring data packets are received in order
(1) A only (2) A and B only (3) A and C only
(4) B and C only (5) All A, B and C

24. A new system must be delivered completely to the client by a given date. There should not be any partial deliveries. Further, the system architecture and design must be fully defined before any coding began.
Which of the following are suitable models to develop this system?
A – waterfall B – spiral C – agile
(1) A only (2) A and B only (3) A and C only
(4) B and C only (5) All A, B and C

25. During the feasibility analysis of a software development project, it was discovered that the development team does not have the knowledge and the skills to develop the software. Which component of the feasibility study would have identified this issue?
(1) economic feasibility (2) legal feasibility
(3) operational feasibility (4) schedule feasibility
(5) technical feasibility

26. Which of the following shows the correct order of stages in the System Development Life Cycle?
(1) Feasibility study → Requirements analysis → System design → Implementation → Testing → Deployment
(2) Feasibility study → System design → Requirements analysis → Implementation → Testing → Deployment
(3) Requirements analysis → Feasibility study → System design → Testing → Deployment → Implementation
(4) Requirements analysis → System design → Feasibility study → Deployment → Testing → Implementation
(5) System design → Requirements analysis → Feasibility study → Implementation → Testing → Deployment

27. Which of the following is **not true** regarding the *prototyping* technique used in system development?
(1) Prototypes need to be approved by the users, during the 'system testing' phase.
(2) Prototyping is neither necessary nor appropriate in every project.
(3) Successful prototyping helps to develop a system that better addresses user needs and expectations.
(4) Successful prototyping helps to eliminate costly late changes to a system.
(5) To get the benefits of prototyping, user feedback on the prototypes is extremely important.

[*See page six*

28. Which of the following statements regarding *software tests* are correct?

A – *White-box tests* involve testing the internal structures and workings of a software.
B – *Unit tests* are usually performed after the *system test*.
C – System developers should take every effort to make the *acceptance test* successful.

(1) A only (2) A and B only (3) A and C only
(4) B and C only (5) All A, B and C

- Read the following description to answer questions **29** and **30**.

A *playground reservation system* is needed for students and others to reserve the school playground (which is adjoining the school) for team sports. Each reservation is for two hours. All non-students will need to pay for their reservations. The reservations are to be made using the National Identity Card (NIC) numbers. The NICs are to be verified at the playground gate before a team is let in.

The algorithm that could be used for the reservation process is shown below with blanks labelled **A** – **D**.

```
BEGIN
   A
   IF user interested to make a reservation THEN
      B
      C
      IF user is not a student THEN
          D
      ENDIF
      Confirm booking and update reservation database
   ENDIF
END.
```

29. Which of the following contains the suitable replacements for the above blanks?

(1) **A** – DISPLAY existing bookings **B** – GET date/time **C** – GET NIC number **D** – Complete user's credit/debit card payment
(2) **A** – DISPLAY existing bookings **B** – GET date/time **C** – Complete user's credit/debit card payment **D** – GET NIC number
(3) **A** – DISPLAY existing bookings **B** – GET NIC number **C** – Complete user's credit/debit card payment **D** – GET date/time
(4) **A** – GET date/time **B** – DISPLAY existing bookings **C** – GET NIC number **D** – Complete user's credit/debit card payment
(5) **A** – GET NIC number **B** – DISPLAY existing bookings **C** – GET date/time **D** – Complete user's credit/debit card payment

30. Which of the following suggestions about the above system is **not** suitable?

(1) The list of reservations for a given date should be provided when needed.
(2) Each time a student is making a reservation he/she should be required to enter his/her home address.
(3) It is suitable to check the validity of the NIC number.
(4) Reservations should not clash with school times.
(5) For fairness, the number of reservations that a particular NIC number is allowed per day should be limited.

[*See page seven*

31. Consider the following relation about a student who is registered in a programme at an institute:
STUDENT(Sno, Snic, Sname, Sphone, Prog_number)

Note: Sno - the unique registration number of the student
Snic - the national identity card number of the student
Sname - the name of the student
Sphone - a phone number of the student
Prog_number - the unique number of the programme for which the student has registered

Which of the following are correct?
A – Sno can be the primary key.
B – Snic can be a candidate key.
C – Prog_number can be a foreign key.

(1) A only (2) A and B only (3) A and C only
(4) B and C only (5) All A, B and C

32. Which of the following are true?
A – A table can have multiple candidate keys.
B – A primary key is always a candidate key.
C – A candidate key of one table can be used as a foreign key in another table.

(1) A only (2) A and B only (3) A and C only
(4) B and C only (5) All A, B and C

33. Which of the following are examples of *one-to many relationships*?
A – A customer can place many orders, but each order is placed by only one customer.
B – An employee can be assigned to multiple projects, and each project can have multiple employees.
C – One department has one manager, and each manager manages multiple departments.
D – A supplier can supply only one item and an item can be supplied by only one supplier.

(1) A and B only (2) A and C only (3) A and D only
(4) B and C only (5) C and D only

34. Match the **Normal forms** labelled from **0** to **3** to the corresponding **Descriptions** labelled from **A** to **D**.

Normal form
0 – Zero normal form
1 – First normal form
2 – Second normal form
3 – Third normal form

Description
A. single valued attributes
B. full functional dependency
C. repeating data
D. transitive dependency

(1) **0** – A, **1** – B, **2** – C, **3** – D
(2) **0** – A, **1** – C, **2** – B, **3** – D
(3) **0** – B, **1** – C, **2** – A, **3** – D
(4) **0** – C, **1** – A, **2** – D, **3** – B
(5) **0** – D, **1** – B, **2** – C, **3** – A

35. What is the primary purpose of database *normalization*?
(1) eliminating data redundancy and anomalies
(2) increasing the number of tables in the database
(3) organizing data into logical structures and relationships
(4) simplifying database queries
(5) speeding-up database queries

[*See page eight*

36. Which of the following will change all occurrences of 'Mahawa' in the 'City' attribute of USER in relation to 'Maho'?

(1) MODIFY USER SET City = 'Maho' WHERE City = 'Mahawa';
(2) MODIFY USER SET City = 'Mahawa' INTO City = 'Maho';
(3) UPDATE USER SET City = 'Mahawa' INTO City = 'Maho';
(4) UPDATE USER SET City = 'Maho' WHERE City = 'Mahawa';
(5) UPDATE USER SET City = 'Maho' WHERE City != 'Mahawa';

37. Which of the following lists the given SQL statement clauses in the correct order?

(1) SELECT,	FROM,	WHERE,	GROUP BY,	HAVING
(2) SELECT,	GROUP BY,	HAVING,	FROM,	WHERE
(3) SELECT,	HAVING,	FROM,	WHERE,	GROUP BY
(4) SELECT,	WHERE,	GROUP BY,	HAVING,	FROM
(5) SELECT,	WHERE,	HAVING,	GROUP BY,	FROM

38. What would be the execution output of the following Python code if a = 5, b = 3, c = 2 and d = 6?

```
x = (a - b) ** c + d % c
print(x)
```

(1) –22 (2) 0 (3) 1 (4) 4 (5) 7

39. What is the execution output of the following Python code?

```
qns = ["a" , "b"]
for x in range (1,3):
    for y in qns:
        print(x,y, end='  ')
```

(1) 0 a 2 b (2) 1 a 3 b (3) 1 a 1 b 2 a 2 b
(4) 1 a 1 b 3 a 3 b (5) 1 a 3 a 1 b 3 b

40. What is the execution output of the following Python code?

```
def list_operation(nlist):
    for i in range(len(nlist)):
        if i % 2 == 0:
            nlist[i] = nlist[i] ** 2
        else:
            nlist[i] = nlist[i] + 3
    return nlist
numbers = [1, 2, 3, 4, 5]
output = list_operation(numbers)
print(output)
```

(1) [1, 2, 3, 4, 5] (2) [1, 5, 9, 7, 25] (3) [2, 5, 6, 7, 10]
(4) [4, 4, 6, 16, 8] (5) [4, 6,16, 8, 36]

41. What is the execution output of the following Python code?

```
marks = [(1, "amara", 96), (2, "rajah", 34),
    (3, "rani", 49),(4, "fahim", 68) ]

i = -1
while i < (len(marks) - 1):
    i += 1
    if marks[i][2] < 50:
        continue
    print(marks[i][1], end="  ")
```

(1) 1 4 (2) 1 amara 4 fahim (3) amara fahim
(4) rajah (5) rajah rani

[*See page nine*

42. The output shown in **Figure 42.2** can be obtained using **exports_imports.txt** shown in **Figure 42.1** by executing the Python code shown in **Figure 42.3** with suitable replacements for its blanks labelled **P** – **U**.

```
Garments E 45%
Fuel I 20%
Machinery I 15%
Tea E 20%
Chemicals I 10%
Rubber E 15%
```

Figure 42.1: exports_imports.txt file

```
Garments : 45%
Tea : 20%
Rubber : 15%
```

Figure 42.2: The output

```
P = open('exports_imports.txt', 'r')
while True:
  Q = P .readline()
  if not Q :
    R

  item = Q.split()
  if item[S] == "E":
    print(item[T], ":",item[U])

P.close()
```

Figure 42.3: The Python code

Which option contains the suitable replacements for the blanks?

(1) **P** – file	**Q** – line	**R** – break	**S** – 1	**T** – 0	**U** – 2
(2) **P** – file	**Q** – line	**R** – continue	**S** – 2	**T** – 1	**U** – 3
(3) **P** – file	**Q** – line	**R** – continue	**S** – 2	**T** – 1	**U** – 3
(4) **P** – line	**Q** – file	**R** – continue	**S** – 1	**T** – 0	**U** – 2
(5) **P** – line	**Q** – file	**R** – break	**S** – 1	**T** – 0	**U** – 2

43. Which of the following statements are true about the web pages created using web authoring tools?

A – The HTML code for such a page is automatically generated.
B – Such a page can be enhanced by manually adding HTML tags later.
C – Multimedia content cannot be added to them.

(1) A only (2) A and B only (3) A and C only
(4) B and C only (5) All A, B and C

44. What is the primary purpose of an HTML *style sheet*?

(1) to apply formatting and styles to HTML elements.
(2) to create databases for a website.
(3) to define the structure of a webpage.
(4) to send form data to databases.
(5) to update the content of a webpage.

45. Which of the following can be used to change the look of an entire website by changing just one file?

A – external CSS B – inline CSS C – internal CSS

(1) A only (2) A and B only (3) A and C only
(4) B and C only (5) All A, B and C

46. For what purpose is POST used in an HTML form?

(1) to display a confirmation message after form submission
(2) to display form data on the screen
(3) to refresh the web page
(4) to retrieve data from the server
(5) to send form data to the server

[*See page ten*

47. Which of the following statements are correct regarding *website publishing*?

A – One has to obtain a *domain name* to publish a website.

B – Before deciding to host a website on one's own computer, one has to do a good cost-benefit analysis on the same.

C – *Shared hosting* will provide faster access to the site's users all the time compared to either *Virtual Private Server (VPS) hosting* or *dedicated server hosting*.

(1) A only (2) A and B only (3) A and C only
(4) B and C only (5) All A, B and C

48. Which of the following is correct?

(1) Arduino Uno is the protocol used for setting up simple IoT applications.
(2) LDR and LED are sensors used in Arduino Uno based IoT applications.
(3) Serial.begin(9600) provides a valid baud rate to initiate the serial communication between the Arduino Uno board and the computer.
(4) Since Arduino Uno does not have a hard disk it is not subjected to unauthorized data access.
(5) An ethernet shield must be connected to the four pins between A0 – A5 of the ATMega328P microcontroller.

49. Which of the following statements are true?

A – Generative Artificial Intelligence (AI) tools can produce new content or data, according to their learned patterns.

B – The use of Generative AI tools such as GPT with user prompts is an example of machine-to-machine coexistence.

C – Although AI is used today, *strong AI* (machines possessing general intelligence and capabilities that are similar to human cognition) still remains a theoretical concept.

(1) A only (2) A and B only (3) A and C only
(4) B and C only (5) All A, B and C

50. Consider the following statements P and Q:

P – A *qubit* of a quantum computer can have a higher number of states than a bit of a traditional computer.

Q – Quantum computing promises to perform calculations, currently beyond traditional computer's reach, at incredible speeds.

Which of the following is valid regarding the above two statements?

(1) Both statements P and Q are correct and statement P gives the reason for statement Q.
(2) Both statements P and Q are correct but the points presented in the two statements are not related.
(3) Statement P is correct but statement Q is incorrect.
(4) Statement P is incorrect but statement Q is correct.
(5) Both statements P and Q are incorrect.

❋ ❋ ❋

සියලු ම හිමිකම් ඇවිරිණි / முழுப் பதிப்புரிமையுடையது / All Rights Reserved]

ශ්‍රී ලංකා විභාග දෙපාර්තමේන්තුව
இலங்கைப் பரீடசைத் திணைக்களம்
Department of Examinations, Sri Lanka

අධ්‍යයන පොදු සහතික පත්‍ර (උසස් පෙළ) විභාගය, 2024
கல்விப் பொதுத் தராதரப் பத்திர (உயர் தர)ப் பரீடசை, 2024
General Certificate of Education (Adv. Level) Examination, 2024

තොරතුරු හා සන්නිවේදන තාක්ෂණය II
தகவல், தொடர்பாடல் தொழினுட்பவியல் II
Information & Communication Technology II

20 E II

පැය තුනයි
மூன்று மணித்தியாலம்
Three hours

අමතර කියවීම් කාලය - මිනිත්තු 10 යි
மேலதிக வாசிப்பு நேரம் - 10 நிமிடங்கள்
Additional Reading Time - 10 minutes

Use additional reading time to go through the question paper, select the questions you will answer and decide which of them you will prioritise.

Index No: .....

Important:

- *This question paper consists of* **16** *pages.*
- *This question paper comprises of two parts,* **Part A** *and* **Part B.** *The time allotted for* ***both parts*** *is* ***three hours.***
- *Use of calculators is* ***not allowed***

PART A – Structured Essay:
(pages 2-8)

- *Answer* ***all*** *the questions* ***on this paper itself.*** *Write your answers in the space provided for each question. Note that the space provided is sufficient for your answers and that extensive answers are not expected.*

PART B – Essay:
(pages 9-16)

- *This part consists* ***six*** *questions, of which,* ***four*** *are to be answered. Use the papers supplied for this purpose.*
- *At the end of the time allotted for this paper, tie the* ***two parts together*** *so that* **Part A** *is* ***on top*** *of* **Part B** *before handing them over to the Supervisor.*
- *You are permitted to remove* ***only*** **Part B** *of the question paper from the Examination Hall.*

For Examiner's Use Only

For the Second Paper		
Part	**Question No.**	**Marks**
A	1	
	2	
	3	
	4	
B	5	
	6	
	7	
	8	
	9	
	10	
Total		

Final Marks

In numbers	
In words	

Code Number

Marking Examiner 1	
Marking Examiner 2	
Marks checked by :	
Supervised by :	

[See page two

Do not write in this column

Part A – Structured Essay

*Answer **all four** questions on this **paper itself***

1.(a) A form that a user can use to enter a complaint regarding a good or a service that he/she received is shown in Figure 1.1. The HTML source that was used to make the form is shown in Figure 1.2 with **seven** blanks (----------).

Figure 1.1

(i) Fill the **seven** blanks of Figure 1.2 to make the code complete.

(04 *marks*)

```
<html>
    <h1>Central Province</h1>
    <h2>Public concerns form</h2>
    <hr style="width:30%;text-align:left;margin-left:0">
      <form method="post" ------------------- ="./action_page.php">
      <h3>Concern</h3>
      <label for="district">District: </label>
      < ------------------- name="district" id="district">
          <option value="kandy">Kandy</option>
          <option value="matale">Matale</option>
          <option value="nuwaraeliya">Nuwara Eliya</option>
      < ------------------- ><br><br>
      <label for="ctype">Type:</label>
      <input type=" ------------------- " name="ctype" id="goods" value="goods">
      <label for="goods">Goods</label>
      <input type=" ------------------- " name="ctype" id="services" value="services">
      <label for="services">Services</label><br><br>
      <label for="description">Description:</label>
      <input type="text" name="description" size="25"><br><br>
    <hr style="width:30%;text-align:left;margin-left:0">
    <h3>Complainant details</h3>
      <label for="name">Name:</label>
      <input type="text" name="name"><br><br>
      <label for="email">Email:</label>
      <input type="email" name="email">
      <label for="phone">Phone:</label>
      <input type="tel" id="phone" name="phone" size="10" pattern="[0-9]{10}"
      title="Invalid telephone number"required><br><br>
      <input type=" ------------------- " value=" ------------------- ">
</form>
<br>
<img src="flag.jpg" alt="Central province flag" width="50" height="40">
<a href="https://www.cpca.lk" title="10, Hill street, Kandy">Central Province Consumer
Affairs</a>
</html>
```

Figure 1.2

[See page three

Do not write in this column

(ii) What happens when the user presses the 'Submit' button on the form?

.....

.....

(01 *marks*)

(iii) What is the benefit of using *input type="email"* for the email address entry field instead of *input type="text"*?

.....

.....

(01 *marks*)

(iv) What can you guess about the purpose of *pattern="[0-9]{10}"* with respect to the Phone entry field?

.....

.....

(01 *marks*)

(v) What is the purpose of the use of *title="10, Hill street, Kandy"* in the *<img src* code line?

.....

.....

(01 *marks*)

(b) Explain the **main** purpose of the HTML code extract shown in Figure 1.3.

```
<?php
  $host = "localhost";
  $db_user = "student_user";
  $db_password = "student_pass";
  $db_name = "studentDB";
  $conn = mysqli_connect ($host, $db_user, $db_password, $db_name);
  if (!$conn) {
    die("<tr><td colspan='3'>Connection failed:" .
    mysqli_connect_error () . "</td></tr>");
    }
  $sql = "SELECT student_id, first_name, last_name FROM stu-dents";
  $result = mysqli_query ($conn, $sql) ;
  if (mysqli_num_rows ($result) > 0) {
    while ($row = mysqli_fetch_assoc ($result) ) {
      echo "<tr>
            <td>" . $row["student_id"] . "</td>
            <td>" . $row["first_name"] . "</td>
            <td>" . $row["last_name"] . "</td>
            </tr>";
    }
  } else {
    echo "<tr><td colspan='3'>No students found .</td></tr>";
  }
  mysqli_close ($conn);
?>
```

Figure 1.3

.....

.....

.....

.....

(02 *marks*)

[See page four

Do not write in this column

2.(a)(i) Following diagram shows the *abstract model of information creation*:

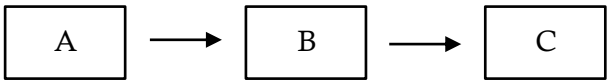

Identify the A, B and C above.

A : ..... B : ..... C : .....

(01 *marks*)

(ii) Write down the A, B and C components of the above model for each of the following online activities:

Activity 1: Successfully logging in to your favourite online bookshop to buy stationery.

Activity 2: Selecting the items to purchase and adding them to your shopping trolley.

Activity 3: Successfully paying for your order using your debit card.

<u>Activity 1</u>

A : .....

B : .....

C : .....

<u>Activity 2</u>

A : .....

B : .....

C : .....

<u>Activity 3</u>

A : .....

B : .....

C : .....

(03 *marks*)

(iii) At a later date, after successfully logging in to this system to purchase the **same items**, you decide to use the 'Repeat Previous Order' option given at the site. Write down any changes to your answer for Activity 2 of part (ii) above.

<u>Activity 2</u>

A : .....

B : .....

C : .....

(01 *marks*)

[See page five

Do not write in this column

(b) *Open source software* require the users to be technically skilled in setting up and configuring them. Briefly explain how the setting up and configuration are usually done in *proprietary software*.

.....

.....

.....

(01 *marks*)

(c) While Information and Communication Technology (ICT) allows us to create and disseminate our intellectual ideas in more efficient and impactful ways, it also contributes to a higher level of plagiarism than in traditional (non-ICT) methods. Briefly explain the reason for this observation.

.....

.....

.....

(01 *marks*)

(d) Some argue that the increasing use of Information and Communication Technology as an indirect contributor to global warming. Briefly explain a major reason for this view.

.....

.....

.....

(01 *marks*)

(e) You browse an online product catalogue in an e-commerce website looking for a product purchase and the website collects your product browsing history without obtaining your consent. What is the security related concern that you face in this situation?

.....

.....

.....

(01 *marks*)

(f) Fill the two blanks of the following statement:

In a reverse auction, from sellers and buyers, ... do the bidding and usually the ..... bid wins.

(01 *marks*)

[See page six

Do not write in this column

3.(a) Draw a flow-chart to input the name of a text file and to count and print the number of words in that file. Assume that the file exists in the computer. (**Hint**: Go on reading each character in the file. Stop when EOF [end of file] character is encountered.)

(03 *marks*)

(b) Write down the output of the following Python code.

```
def check_values (n) :
      result = []
      for i in range(1, n + 1):
            if i % 2 == 0 and i % 3 == 0:
                  result.append (i)
      return result
output = check_values (12)
print (output)
```

.....

(02 *marks*)

(c) Fill the **five** blanks (----------) of the following Python code which has been written to find the prime numbers from 2 upto a given number.

Note: A prime number is any whole number greater than 1 that is divisible only by 1 and itself. e.g., Prime numbers from 2 up to number 5 are 2, 3 and 5.

```
upper = _____________ (input ('Enter end of range:'))
if upper > 1:
      print ("Prime numbers between 2 and ", upper, "are:")
      for num in range (2, _____________ ) :
            for i in range (2, _____________ ) :
                  if ( _____________ ) == 0 :
                        _____________
            else:
               print (num)
```

(05 *marks*)

[See page seven

Do not write in this column

4.(a) List in proper order, the **three** stages of the System Development Life Cycle (SDLC) covered by the Structured System Analysis and Design Methodology (SSADM).

(1) : .....

(2) : .....

(3) : .....

(01 *marks*)

(b) Write down **one** benefit of *prototyping*.

.....

.....

.....

.....

(01 *marks*)

(c) (i) A guest billing system for a hotel is required. The following information is given by the hotel client to the system analyst.

The hotel has different types of rooms with different rates. Hotel also has a restaurant and a health center. A guest can take one or more rooms. Once a guest checks-in to the hotel all his transactions at the restaurant and the health center should be entered to the system. When the guest checks-out by giving his name, his final bill should be made considering his period of stay, rooms occupied and his transactions at the restaurant and the health center. When the guest is given the final bill, he makes the payment for which a receipt is given.

Draw the data flow diagram for the **check-out process** in the above description <u>containing only the following entity and processes</u> and <u>including the necessary data stores and data flows.</u>

Entity : Guest
Process : 1. Prepare cost of rooms
: 2. Make final bill
: 3. Accept guest payment

(03 *marks*)

[See page eight

Do not write in this column

(ii) When making the final bill, a 10% service charge is added to the total amount that the guest has to pay. Write down the process description for '2. Make final bill'.

.....

.....

.....

.....

.....

.....

.....

.....

.....

.....

.....

.....

(02 *marks*)

(d) Fill in the blank of the following statement:

A good user interface makes it easy for a user to understand and ..... *a system.*

(01 *marks*)

(e) Fill in the blank of the following statement:

Pilot deployment is a/an ..... *scale implementation that is used to prove the validity of a project idea.*

(f) A shop manager needs a stock control system. There are three options. He can either select and buy one from two off-the-shelf stock control systems (named A and B) or he can develop his own stock control system (named C).

The manager wants the final stock control system to contain two important features (named F1 and F2).

Suggest a method that the manager can use to choose one from A, B and C. (**Hint**: Give marks to each option.)

.....

.....

.....

.....

.....

.....

.....

.....

(01 *marks*)

* *

සියලු ම හිමිකම් ඇවිරිණි / முழுப் பதிப்புரிமையுடையது / All Rights Reserved]

ශ්‍රී ලංකා විභාග දෙපාර්තමේන්තුව
இலங்கைப் பரீடசைத் திணைக்களம்
Department of Examinations,Sri Lanka

අධ්‍යයන පොදු සහතික පත්‍ර (උසස් පෙළ) විභාගය, 2024
கல்விப் பொதுத் தராதரப் பத்திர (உயர் தர)ப் பரீடசை, 2024
General Certificate of Education (Adv. Level) Examination, 2024

තොරතුරු හා සන්නිවේදන තාක්ෂණය II
தகவல், தொடர்பாடல் தொழினுட்பவியல் II
Information & Communication Technology II

20 E II

Part B

❋ *Answer any **four** questions only.*

5. (a) Draw the complete truth table for the following circuit:

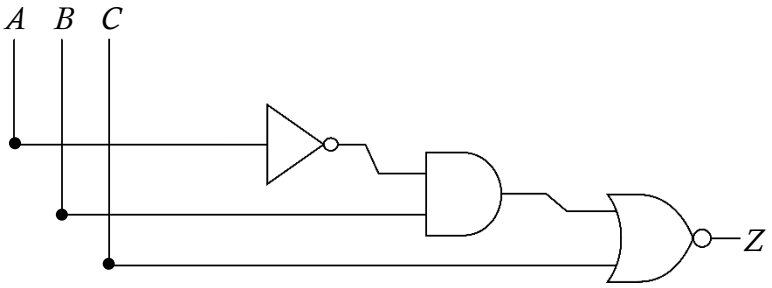

(02 *marks*)

(b) Write down the following Boolean expression in the simplest form.

$(A + B) \cdot (A + \bar{B}) + A\bar{B}$ (01 *mark*)

(c) In a circuit with three inputs A, B and C the output (Z) should be 1 when each of two or three inputs is 1. If none or only one of the inputs are 1 then the output should be 0.

(i) Draw the complete truth table for the above circuit. (02 *marks*)

(ii) Complete the Karnaugh map relevant to the above circuit according to the following format:

C \ AB	00	01	11	10
0				
1				

(02 *marks*)

(iii) Using the Karnaugh map, derive the most simplified sum-of-products (SOP) expression for the output Z. Show the loops clearly on the Karnaugh map. (02 *marks*)

(iv) Draw a logic circuit for the most simplified expression derived in above (iii) by only using AND, NOT and OR gates. (01 *mark*)

(d) (i) Explain the use of *half adder* in digital circuits. (01 *mark*)

(ii) Describe how a *flip-flop* works as a memory element in digital circuits. Explain how it differs from combinational logic gates. (02 *marks*)

(iii) Draw the truth table for a *full adder* circuit. (02 *marks*)

[*see page ten*

6. (a) Draw a sketch to show how a computer and a printer should be connected in a *point-to-point topology* using a twisted pair Ethernet cable. (01 *mark*)

(b) Consider a network consisting of two separate local area networks (LANs) of two departments A and B. Each department's LAN has four computers (named C1 to C4 in A, and C5 to C8 in B respectively). In addition, a common server (SVR) for the use of these two departments is also included.

(i) Draw the diagram of this network. Clearly indicate on it the network devices that are used to establish the two local area networks and to connect the entire network to the Internet. (01 *mark*)

(ii) Give the reasons for the placement of these devices in their respective locations. (01 *mark*)

(iii) Suppose a unit of data is being sent from C1 to C6. Indicate that data flow in the above network diagram using dotted lines. (01 *mark*)

(c) Suppose an organization is assigned the 192.168.100.0/24 IP address block. Assume that the organization needs to create six subnets, namely S1, S2, S3, S4, S5 and S6 from this address block with each subnet having at least 25 usable IP addresses.

(i) Write the subnet mask of the above given IP address block in dotted decimal notation. (01 *mark*)

(ii) For each subnet, list the network address, first usable IP address, last usable IP address and the broadcast address in a table. (03 *marks*)

(d) (i) What is the role of the Domain Name System (DNS) when the user enters a web address (e.g., *http://www.gmail.com*) into the URL field of a web browser? (01 *mark*)

(ii) What is meant by the 'hierarchical and distributed structure' of the DNS? (02 *marks*)

(e) Write down the name of the TCP/IP model layer responsible for each of the following tasks:

(i) maintaining a smooth connection between the application and the user

(ii) sending and receiving data in binary form

(iii) specifying the path that the data packets will use for transmission

(iv) dividing data into packets (02 *marks*)

(f) Suppose Kamal wants to send the secret message ADD to Nimal. Kamal converts ADD to CEE before sending it to Nimal.

(i) Write down the encryption key used by Kamal in this communication. (01 *mark*)

(ii) If Nimal receives ECD from Kamal in a separate communication using the same security scheme, what is the original message from Kamal? (01 *mark*)

[*see page eleven*

7. (a) Figure 7.1 shows the Arduino circuit that Saman implemented to detect a door opening.

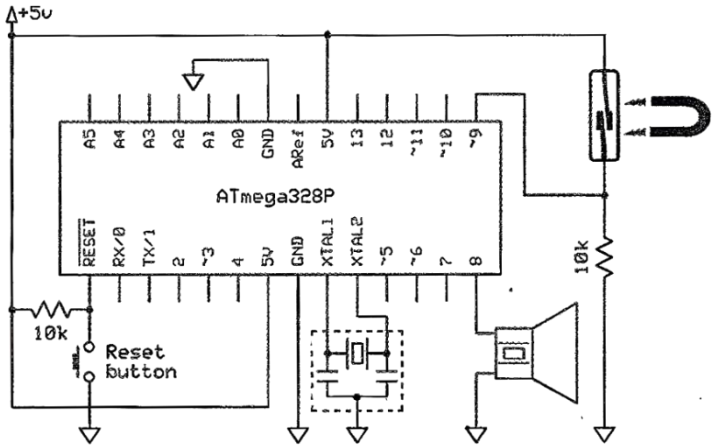

Figure 7.1

(i) Explain the behaviour and operation of the sensor used in this circuit. (02 *marks*)

(ii) To operate this setup Saman wrote the firmware code shown in Figure 7.2. However, the setup failed to operate as expected due to defects in the code. Write down the corrections that you would do to the code. (02 *marks*)

```
const  int  SensorP  =  9;
const  int  BuzzerP  =  8;

void  setup()  {
        pinMode  (SensorP,  INPUT);
        pinMode  (BuzzerP,  OUTPUT);
}
void  loop()  {
        int  senState  =  digitalRead(SensorP);
        if  (senState  ==  HIGH)
                tone(SensorP,262);
        else
                noTone(BuzzerP,0);
}
```

Figure 7.2

(iii) Saman hopes to extend this circuit to indicate the door openings only at night time. What does he need to modify in this circuit to add that feature? If any item(s) must be connected to the ATmega328P, indicate the relevant pin(s). (02 *marks*)

(b) *SuperMobile* is an online mobile phone shop where customers can purchase mobile phones through its *e-Commerce* site. *SuperMobile* uses the third-party courier service *DeliverToday* as its delivery partner. The customers who purchase mobile phones from *SuperMobile* become members of the loyalty program. They can upload their reviews, feedback, and creative content related to their mobile phone usage to the online site and receive beneficial loyalty points in return.

(i) Write down the e-Business transaction types that are possible with *SuperMobile*. (01 *mark*)

(ii) *SuperMobile* owners speculate that establishing their own delivery team for customer deliveries can be cost-effective and more profitable than using the *DeliverToday* service. Analyse this speculation by giving **one reason each** for and against this view.
(**Note:** Consider the financial aspects only.) (02 *marks*)

(iii) Mobile phones are not perishable and thus don't indicate expiry dates. However, they often have a finite shelf life beyond which the customers are reluctant to purchase them. Give a reason for this observation. (01 *mark*)

(iv) Suggest a suitable business strategy that *SuperMobile* can use **both** to reduce the environmental damage due to e-waste and also to increase its sales. (02 *marks*)

[*see page twelve*

(c) Consider a multi-agent system where agents (mobile robots) are designed to collaborate in a warehouse package moving task.

Each package is to be moved from its storage point (A) to its assigned delivery point (B) across the warehouse floor area. Each agent is tasked with moving the assigned goods from point A to point B in an optimum manner. Each agent has its own utility function that helps the agent to make optimum decisions based on the given set of parameters.

(i) Highlighting the key characteristics, write down how the concept of 'agents' in this multi-agent system differs from a standard software program. (01 *mark*)

(ii) Write down one **positive** (reward) and one **negative** (punishment) factor that could be considered in the utility function definitions of the agents (robots). (02 *marks*)

8. (a) Write the output of the Python code given in Figure 8.1.

```
def calculate(n):
    result = 0
    for i in range(1, n+1):
        for j in range(i):
            result += i * j
    return result

print(calculate(4))
```

Figure 8.1 (02 *marks*)

(b) Figure 8.2 contains a labeled Python code to print the binary equivalent of an input decimal whole number. Write down the suitable replacements for the labels **P**–**U** to complete the code.

```
reversed_binary = ''

n = float(input("Enter a whole number: "))
if (n%1 != P):
    exit("Please enter a whole number.")
n = Q (n)      #convert n to an integer
if (n = = P):
    print(n)

while n >= 1:
    reversed_binary = reversed_binary + R (S)
    n = T

binary = U [::-1]
print(binary)
```

Figure 8.2

(03 *marks*)

[*see page thirteen*

(c) There is a limit imposed on the maximum weight of an airline passenger's bag. Thus when a person is flying, s/he should select the items which are most important for him/her for the trip.
From three items, a labeled Python code written to help a person decide on the 'highest value' items that s/he should choose for a bag, is shown in Figure 8.3. The total weight of the bag should be within the airline's capacity limit for a bag which is 50 Kg. The weights, values and the names of the three items are in the relevant arrays. The output of the code is given in Figure 8.4.

```
def item_selector(remainder, weights, values, names):
    A=len(B)
    merged = [(values[i], weights[i], names[i], i) for i in range(n)]
    print("Merged:", merged)
    merged.sort(reverse=True, key=lambda x: x[0])
    print("Sorted records:", merged)

    res = ' '
    for value, weight, name, index in merged:
      if remainder >= weight:
          C = D + name + ' '
          E = F – G
    return res

# Input:
bag_capacity = 50
weights = [49, 10, 35]
values = [60, 100, 120]
names = ["Laptop", "Book", "Clothes"]

selected = H(bag_capacity, weights, values, names)
print("Selected items:", I)
```

Figure 8.3

```
Merged: [(60, 49, 'Laptop', 0), (100, 10, 'Book', 1), (120, 35, 'Clothes', 2)]
Sorted records: [(120, 35, 'Clothes', 2), (100, 10, 'Book', 1), (60, 49, 'Laptop', 0)]
Selected items: Clothes Book
```

Figure 8.4

(i) Write down the suitable replacements for the **nine** labels (**A**–**I**) in the Python code given in Figure 8.3.

Notes:

- The Python sort() method could be used to sort a list.
  Syntax : **list.sort(reverse=True | False, key=myFunc)**
- When 'reverse=True', the list is sorted into descending order.
- How the sorting is to be done could be indicated through the 'key'.
  e.g., 'key=lambda x: x[0]' in the above code indicates that the sorting is to be done based on the numbers in the 'values' array. (09 *marks*)

(ii) Describe the changes that should be done to the code to increase the number of items from three to five. (01 *mark*)

[*see page fourteen*

9. (a) Consider the following description relevant to a database that is to be developed for a fuel station to manage the details of customer transactions:

- Each customer [Customer] has a unique identifier [Cid], a name [Cname] (consisting of a first name [Cfname] and a surname [Csname]) and a phone number [Cphone]. Each customer may have multiple phone numbers. Each customer owns [owns] one or more vehicles.
- Each vehicle [Vehicle] has a unique vehicle number [Vno] and a model [Vmodel]. Each vehicle is owned by only one customer.
- The fuel station sells several petrol types [Petrol]. Each petrol type has a unique identifier [Pid] and a price per liter [Pprice].
- Different petrol types can be purchased for a vehicle [purchases], and each petrol type may be purchased for multiple vehicles.
- Each petrol purchase is recorded with a vehicle number [Vno], a petrol type identifier [Pid], the quantity of petrol sold [Sqty] and the date of sale [Sdate].
- Each employee [Employee] has a unique number [Eno], a name [Ename], a position [Eposition] and a type [Etype] (which could be either full-time or part-time). An employee may sell [sells] multiple petrol types. Each petrol type can be sold by many employees.

(i) Draw an ER Diagram for this application showing the entities, attributes and relationships. Underline the key attributes. **Note**: Use **only** the terms given within square brackets in the above description for the entities, attributes and relationships. Use upper case letters for entities and relationships. (04 *marks*)

(ii) Write the relational schema for the ER diagram.

Note: List **only** the tables with their attribute names. Underline the primary keys. Draw an arrow from each foreign key to the table it references with the arrow head pointing to the primary key of the referenced table. (04 *marks*)

(b) Consider the following **Result** table containing the details about students, their subjects, the teachers of those subjects, the exam dates and the marks.

Student_ ID	Student_ Name	Subject_ ID	Subject_ Name	Teacher_ ID	Teacher_ Name	Exam_Date	Mark
101	Arun	SU101	ICT	2001	Smith	2024-09-20	85
102	Kamal	SU102	Physics	2002	Johnson	2024-09-21	78
103	Fernando	SU101	ICT	2001	Smith	2024-09-20	90
104	Haran	SU103	Maths	2003	Williams	2024-09-19	88
105	Bob	SU101	ICT	2001	Smith	2024-09-20	65
101	Arun	SU102	Physics	2002	Johnson	2024-09-21	68
103	Fernando	SU103	Maths	2003	Williams	2024-09-19	76

(i) In which normal form does the **Result** table exist? Justify your answer. (02 *marks*)

(ii) Describe how you would convert the **Result** table to its next normal form. (02 *marks*)

[*see page fifteen*

(c) Consider the following **Product** table.

Product_No	Product_Type	Product_Name	Retail_Price	Wholesale_Price
P1	Food	Milk	850.00	800.00
P2	Food	Tea	825.00	815.00
P3	Food	Sugar	900.00	800.00
P4	Stationery	Book	700.00	650.00
P5	Stationery	Paper	725.00	700.00

(i) Write down the output of the following SQL statement:

```
SELECT Product_Name, Wholesale_Price
FROM Product
WHERE Retail_Price – Wholesale_Price > 50;
```

(01 *mark*)

(ii) Write the required SQL statement to insert the following record to the **Product** table:

Product_No	Product_Type	Product_Name	Retail_Price	Wholesale_Price
P6	Stationery	Bag	755.00	750.00

(01 *mark*)

(iii) Write down the SQL statement to display *Product_Type*, *Product Name* and *Wholesale_Price* of the products whose *Product_Name* is not *Bag*. (01 *mark*)

10.(a) Consider the following python statement:

```
answer = height + width
```

There will be multiple binary instructions that the CPU will have to execute with respect to the above statement. The **first** is to load the value of variable '`height`' into a register. The **fourth** would be to store the result of the addition in '`answer`' variable.

What would be the **second** and **third** instructions? (02 *marks*)

(b) Show that the answer for $1100_2 - 1010_2$ could be obtained by adding the 2s complement of 1010_2 to 1100_2 and ignoring the carry. (03 *marks*)

(c) Amal starts a single processor computer and starts a *web browser*. After sometime he starts a *spreadsheet* application too on the same computer.

(i) READY, RUNNING and BLOCKED are three states of a process. When the operating system of the computer temporarily stops the above *web browser process* in order to let the *spreadsheet process* run on the processor, to which of the above three states will the *web browser process* transit? (01 *mark*)

(ii) Write down the **state transition** that the *web browser process* will undergo, when it has to wait for some data from the web server. (01 *mark*)

(iii) Explain the use of 'Program counter' of the *Process Control Blocks* during a *web browser process* → *spreadsheet process* context switch. (02 *marks*)

[*see page sixteen*

(d) A computer uses 16-bit virtual addresses. This computer has a 32 KB physical memory and a 4 KB page size. (01 *mark*)

(i) Write down the number of frames in physical memory.

(ii) A user runs a program having a size of 64 KB on this computer. A few selected fields of the first few rows of the *page table* of that process at a particular time are shown in the figure.

	Frame	Validity
0	111	1
1	100	1
2	110	1
3	101	1
4	000	0
5	000	0
6	000	0

Notes:

- The page number is used as the index into the page table.
- The frame number is indicated in binary. **Validity** bit being 1 indicates that the relevant page is in physical memory.

Assume that in the above process the virtual address 0010 0000 0000 0100 is wanted. Write down the 15-bit physical address that the above address would get mapped to. (01 *mark*)

(iii) Assume that in the above process given in (ii), the virtual address 0100 0000 0000 0001 is wanted. Write down **one** reason why the operating system won't decide frame 011 of memory as the frame for that page. (01 *mark*)

(iv) In addition to the above fields of the page table, a **Modified** bit may also exist. It will be set to 1 when data in a page is changed. Why is that information important for the operating system? (01 *mark*)

(e) (i) The data of the *average.py* file is stored in blocks 100, 125, 150 and 175 on a disk that uses an *indexed allocation scheme*. In this allocation scheme, what important information is needed by the operating system to find the blocks of this file? (01 *mark*)

(ii) When *contiguous allocation* is compared with *indexed allocation*, which one can cause the *external fragmentation* of a disk? (01 *mark*)

* * *